REFRIGERATION LED LIGHTING

REFRIGERATED SHELF LIGHTING

B009064BC1S02



DC24V | **IP65** | **CRI ≥90** | **SDCM ≤3** | **120° BEAM**

PRODUCT INTRODUCTION

B009064BC1S02 is designed for horizontal shelf lighting in refrigerated display cabinets. Install it along a shelf beam to illuminate merchandise at each shelf level. The profile measures 10.6 × 16 mm, and custom lengths are available up to 2000 mm.

KEY FEATURES

DC24V low-voltage design

For refrigerated display applications.

120° beam

For horizontal shelf lighting in refrigerated displays.

CRI ≥90 / SDCM ≤3

3000K, 4000K and 6500K options.

IP65 / -20°C to +40°C

Rated protection and operating ambient temperature.

Six standard lengths

296-1136 mm; custom lengths available up to 2000 mm.

APPLICATION AREA

Mount horizontally along the shelf beam and aim the light toward merchandise.



SUITABLE CABINETS

Refrigerated display cabinets
Multi-deck refrigerated displays

Shelf lighting in an open refrigerated display

Mounted beneath the front edge of each shelf, the light bar directs light down toward the merchandise below.



The horizontal bands of light show how shelf lighting can bring light to each tier of a multi-deck case.

Parameter	Specification
Product Number	B009064BC1S02
Operating Voltage	DC24V
CRI	≥90
Color Consistency	SDCM ≤3
Color Temperature	3000K / 4000K / 6500K
Beam Angle	120°
Luminaire Efficacy	100-110 lm/W (catalog values)
IP Rating	IP65
Operating Ambient Temperature	-20°C to +40°C
Profile Cross-Section	10.6 × 16 mm
Standard Lengths	296 / 536 / 656 / 776 / 896 / 1136 mm
Custom Length	Available up to 2000 mm
Lifetime	50,000 hours
Standards Listed in Catalog	UL 2108 / CSA C22.2 No. 250.2

DIMENSIONAL

Unit: mm

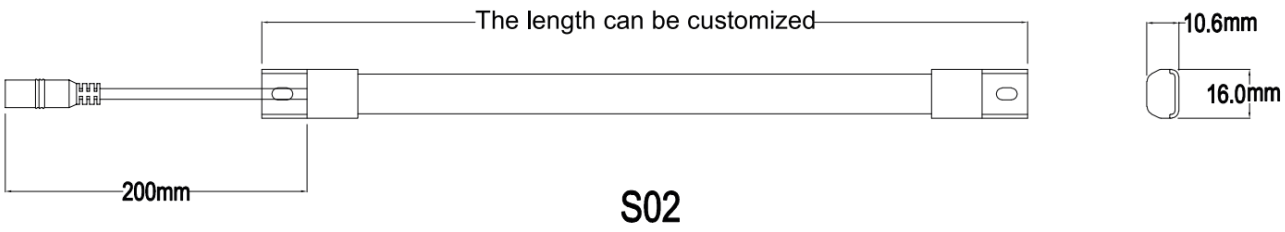

Cross-section: 10.6 x 16 mm | Input lead dimension: 200 mm (see drawing)

CUSTOM LENGTH

Custom lengths up to 2000 mm are available.

Technical data source: iPixel Refrigerated Display Lighting Catalog V1.0, pages 21-24.

All rows use model B009064BC1S02. Values within each CCT, flux and efficacy cell correspond from top to bottom.

Model	Power (W) typ.	Input Voltage (V DC)	CRI	CCT (K)	Beam Angle	Luminous Flux (lm)	Luminaire Efficacy (lm/W)	Length (mm)	SDCM	IP	Net Weight (g)
B009064BC1S02	1.5	24	≥90	3000 4000 6500	120°	150 160 160	100 110 110	296	≤3	IP65	26
B009064BC1S02	2.7	24	≥90	3000 4000 6500	120°	270 300 300	100 110 110	536	≤3	IP65	47
B009064BC1S02	3.3	24	≥90	3000 4000 6500	120°	290 320 320	100 110 110	656	≤3	IP65	58
B009064BC1S02	3.9	24	≥90	3000 4000 6500	120°	390 430 430	100 110 110	776	≤3	IP65	68
B009064BC1S02	4.5	24	≥90	3000 4000 6500	120°	450 490 490	100 110 110	896	≤3	IP65	79
B009064BC1S02	5.8	24	≥90	3000 4000 6500	120°	580 630 630	100 110 110	1136	≤3	IP65	100

Power is typical. Luminous flux and luminaire efficacy are reproduced as listed in the catalog.

OPTICAL DISTRIBUTION & INSTALLATION

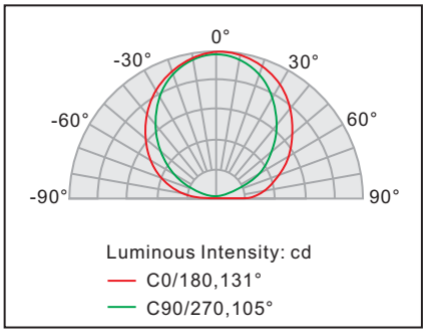

Nominal beam angle: 120°
C0/180: 131°
C90/270: 105°

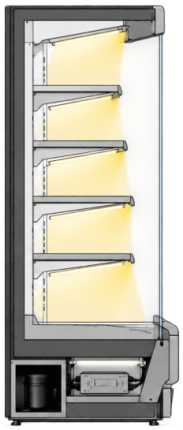

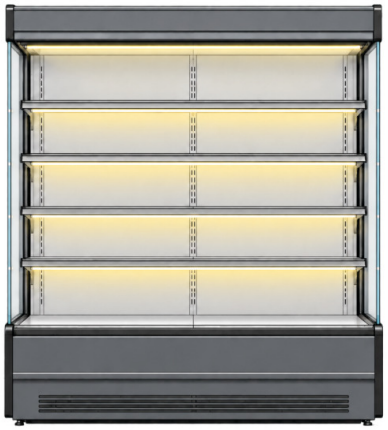

Horizontal shelf-beam installation illuminates merchandise at each shelf level.

Construction and electrical tolerance

Housing: White polycarbonate (PC). LED package: 2835. Rated power tolerance: ±10%. The technical drawing labels the two cross-section dimensions as 10.6 mm and 16 mm.

Standard mounting hardware: screws for the light bar's mounting tabs. Select the fixing method to suit the cabinet material.

Optional cable: 1000 mm L-shaped connecting cable. Confirm connector compatibility when ordering.

LED quantity by length

Standard length (mm)	LED quantity
296	16
536	32
656	40
776	48
896	56
1136	72

Reference illuminance diagram

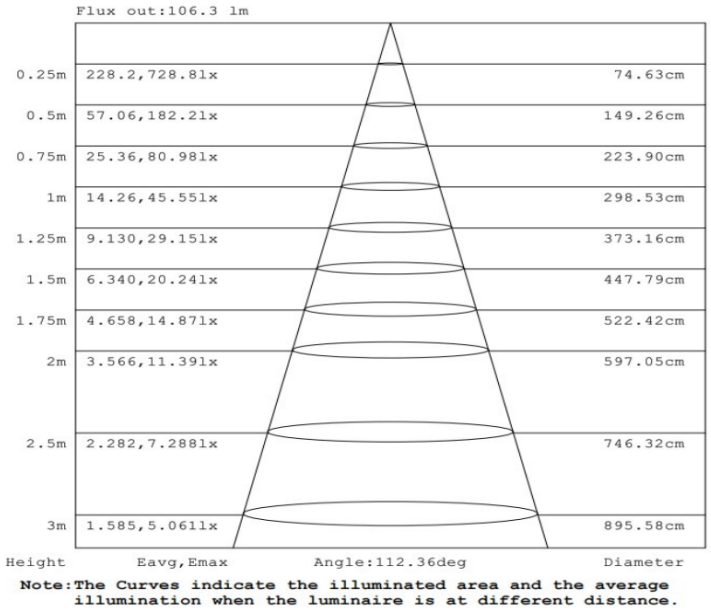

Reference test data from the technical datasheet. Illuminance varies with distance and configuration.

Standards reference

Technical documentation lists UL 2108 and CSA C22.2 No. 250.2 under UL file E509505. Confirm the applicable markings for the ordered configuration. Optical and electrical values are representative and may vary with configuration and operating conditions.

Source: model technical datasheet V1.0 and product instruction manual.

Screw mounting beneath the shelf front

Align the light bar with the underside of the shelf's front edge. Secure it through its mounting tabs with screws suitable for the shelf material. Aim the light down toward the front of the merchandise.

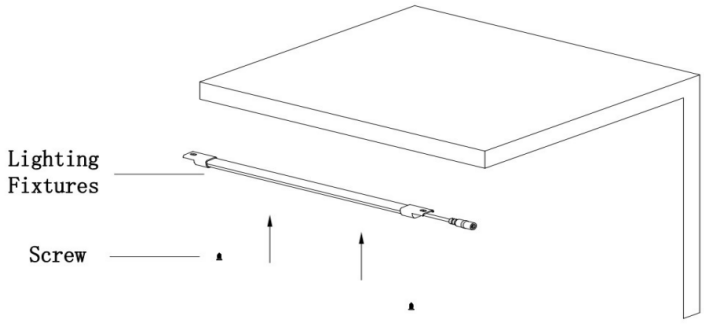

1. Secure the light fixture to the board with screws.

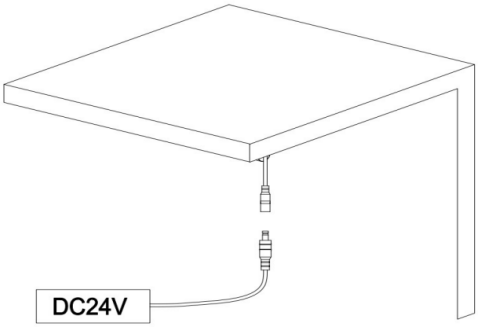

2. Connect the wiring; connect to 24V DC.

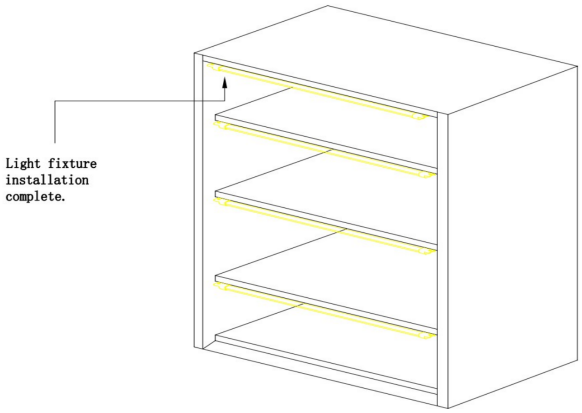

Before fixing the light bar

Disconnect power. Confirm that the cabinet material can support the fasteners. Route the cable clear of moving parts and sharp edges.

After installation

Check that the light bar is secure and the connector is fully seated. Confirm connector polarity before switching on.

24 V DC connection

With power disconnected, plug the connecting cable into the light bar and connect it to a 24 V DC supply. Allow power headroom and confirm the maximum run length and total connected load.

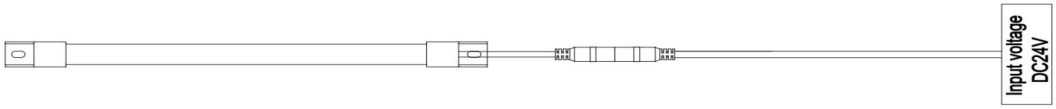

Safety and maintenance

• Disconnect power before cleaning. Avoid corrosive cleaning agents.

• Avoid twisting, dragging or sharply bending the light bar and cable. Avoid prolonged direct viewing while the bar is lit.

• Use qualified personnel for installation, removal, repair and replacement. Obtain approval before modifying circuitry, connectors or internal components.

STANDARD CONFIGURATION

Order No.	Photo	Description	Dimensions (mm)	N.W. (g)
Connecting cable		Connecting cable between power supply and lights, 1000 mm length.	L 1000	22
Screw		Steel screws for securing the light bar through its mounting tabs.	-	0.5

OPTIONAL CONFIGURATION

Order No.	Photo	Description	Dimensions (mm)	N.W. (g)
Power Supply		Input: 90-264 VAC. Output: 24V DC.	-	-
L-shaped 1-to-2 connection cable		Two L-shaped plugs, ideal for installation in tight spaces.	L 400	21
1-to-2 connection cable		Simultaneously supplying power to two LED lights.	L 400	21
Cable Grommet		Protects cables from sharp edges when passing through holes.	Ø60 × 22 (Cutout Ø49)	19
Connector		Adapter for connecting two DC male/female plugs together.	Ø5.3 × 20.4	0.8
Wire connector		Used for seamless, end-to-end direct connection of two lights.	L 170	5.8

iPixel LED Light Co., Ltd
Building A, Chezhan industrial park, Tianbao Rd, Shiyan Town, Baoan, Shenzhen, China
www.ipixelleds.com | Technical data: Refrigerated Display Lighting Catalog V1.0, pp. 21-24.

Product packaging

The light bar is placed in a protective sleeve and packed in a carton.

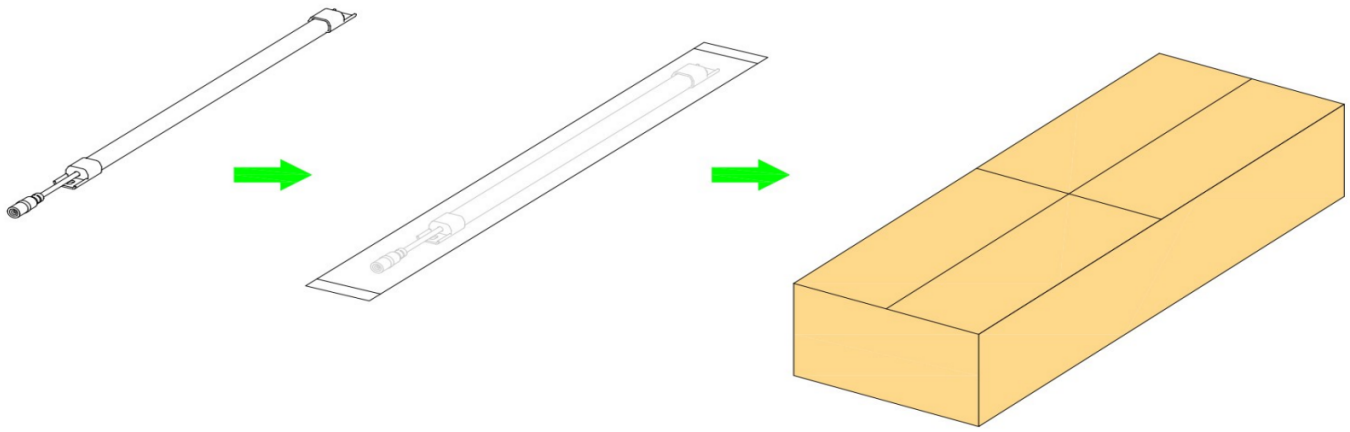

Light bar **Protective sleeve** **Outer carton**

Handling

Avoid dragging, twisting or sharply bending the light bar or cable during packing and handling.