REFRIGERATION LED LIGHTING

VERTICAL DOOR LIGHTING

B012144BC1V02



DC24V | **IP65** | **CRI ≥90** | **SDCM ≤3** | **110° BEAM**

PRODUCT INTRODUCTION

Designed for vertical mounting on the inside door frame of glass-door refrigerated displays, B012144BC1V02 uses an asymmetric optic to direct light inward onto merchandise. The design helps reduce shadows from shelves and products, while limiting light directed toward shoppers.

APPLICATION AREA

Vertical on the door frame (inside). Aim the light inward onto merchandise.



KEY FEATURES

DC24V low-voltage design

For refrigerated display applications.

110° beam

For vertical door-frame illumination in refrigerated displays.

CRI ≥90 / SDCM ≤3

3000K, 4000K and 6500K options.

IP65 / -30°C to +40°C

Rated protection and operating ambient temperature.

Nine standard lengths

296-1656 mm; custom lengths available up to 2000 mm.

SUITABLE CABINETS

Glass-door merchandisers
Multi-deck refrigerated displays
Beverage coolers
Dairy cabinets
Fresh-food refrigerators
Grab-and-go cabinets

Side-pillar lighting in upright glass-door cabinets

The light bar mounts vertically on the inner side pillar. The 110° beam provides broader coverage across the merchandise.



This cabinet example shows the upright glass-door format used for side-pillar lighting.

Parameter	Specification
Product Number	B012144BC1V02
Operating Voltage	DC24V
CRI	≥90
Color Consistency	SDCM ≤3
Color Temperature	3000K / 4000K / 6500K
Beam Angle	110°
Luminaire Efficacy	90-110 lm/W, depending on length and CCT
IP Rating	IP65
Operating Ambient Temperature	-30°C to +40°C
Profile Size (W × H)	18.4 × 13 mm
Standard Lengths	296 / 514 / 568 / 677 / 731 / 840 / 1112 / 1493 / 1656 mm
Custom Length	Available up to 2000 mm
Lifetime	50,000 hours
Standards Listed in Catalog	UL 2108 / CSA C22.2 No. 250.2

DIMENSIONAL

Unit: mm

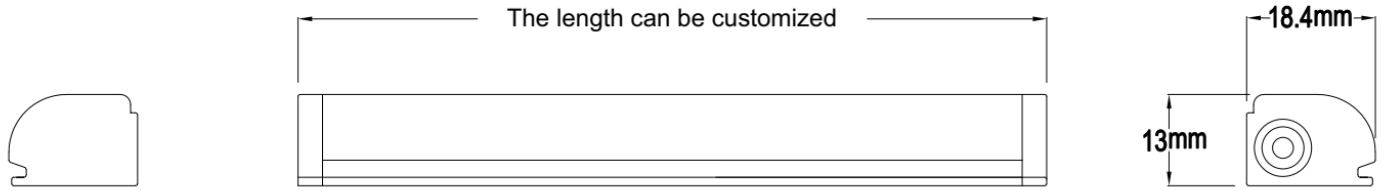

Width: 18.4 mm | Height: 13 mm | Length: see Specification Matrix

CUSTOM LENGTH

Custom lengths up to 2000 mm are available.

Technical data source: iPixel Refrigerated Display Lighting Catalog V1.0, pages 10-12.

All rows use model B012144BC1V02. Values within each CCT, flux and efficacy cell correspond from top to bottom.

Model	Power (W) typ.	Input Voltage (V DC)	CRI	CCT (K)	Beam Angle	Luminous Flux (lm)	Luminaire Efficacy (lm/W)	Length (mm)	SDCM	IP	Net Weight (g)
B012144BC1V02	2	24	≥90	3000 4000 6500	110°	200 220 220	100 110 110	296	≤3	IP65	34
B012144BC1V02	3.5	24	≥90	3000 4000 6500	110°	350 380 380	100 110 110	514	≤3	IP65	59
B012144BC1V02	3.8	24	≥90	3000 4000 6500	110°	380 410 410	100 110 110	568	≤3	IP65	66
B012144BC1V02	4.6	24	≥90	3000 4000 6500	110°	460 500 500	100 110 110	677	≤3	IP65	78
B012144BC1V02	4.9	24	≥90	3000 4000 6500	110°	490 530 530	100 110 110	731	≤3	IP65	85
B012144BC1V02	5.7	24	≥90	3000 4000 6500	110°	570 620 620	100 110 110	840	≤3	IP65	97
B012144BC1V02	7.5	24	≥90	3000 4000 6500	110°	750 820 820	100 110 110	1112	≤3	IP65	129
B012144BC1V02	10	24	≥90	3000 4000 6500	110°	900 1000 1000	90 100 100	1493	≤3	IP65	173
B012144BC1V02	11.2	24	≥90	3000 4000 6500	110°	1000 1120 1120	90 100 100	1656	≤3	IP65	191

Power is typical. Luminous flux and luminaire efficacy are reproduced as listed in the catalog.

OPTICAL DISTRIBUTION & INSTALLATION

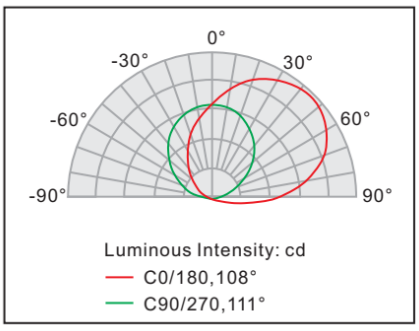

Nominal beam angle: 110°
C0/180: 108°
C90/270: 111°



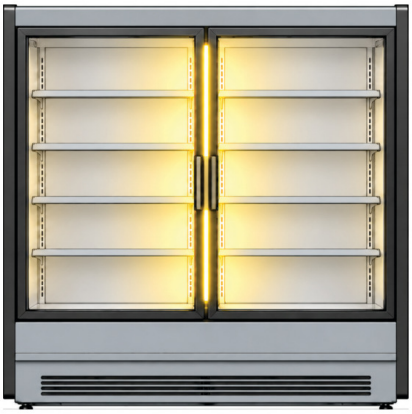

Vertical installation on the inside door frame directs light onto merchandise behind glass.

Construction and electrical tolerance

Housing: White polycarbonate (PC). LED package: 2835. Rated power tolerance: ±10%.

Clip-and-screw sets per bar: 2 up to 1 m, 3 over 1 m through 1.5 m, and 4 over 1.5 m through 2 m.

Optional cable: 1000 mm L-shaped connecting cable. Confirm connector compatibility when ordering.

LED quantity by length

Standard length (mm)	LED quantity
296	40
514	72
568	80
677	96
731	104
840	120
1112	160
1493	216
1656	240

Reference illuminance diagram

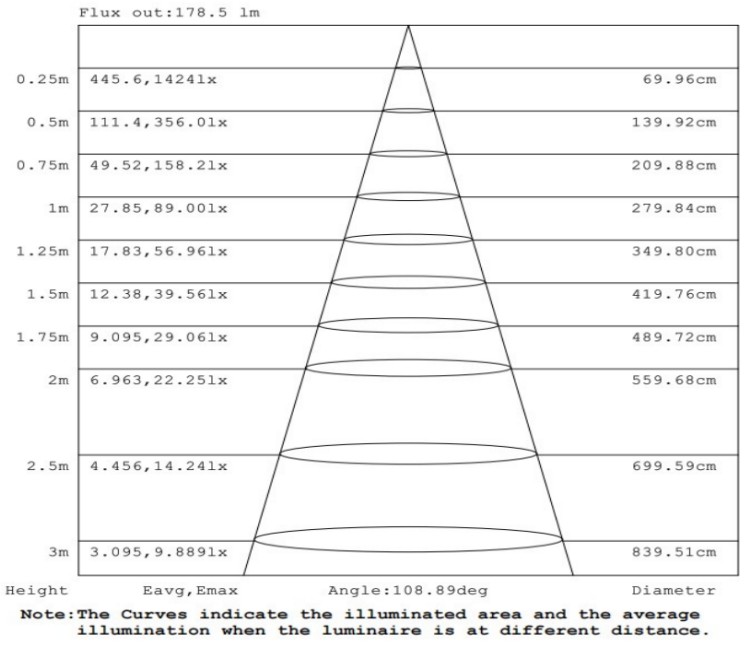

Reference test data from the technical datasheet. Illuminance varies with distance and configuration.

Standards reference

Technical documentation lists UL 2108 and CSA C22.2 No. 250.2 under UL file E509505. Confirm the applicable markings for the ordered configuration. Optical and electrical values are representative and may vary with configuration and operating conditions.

Source: model technical datasheet V1.0 and product instruction manual.

Clip mounting on the vertical side pillar

Fasten the clips to the inner side pillar with screws, then snap in the light bar. Aim the light toward the merchandise and allow clearance for the door and cable.

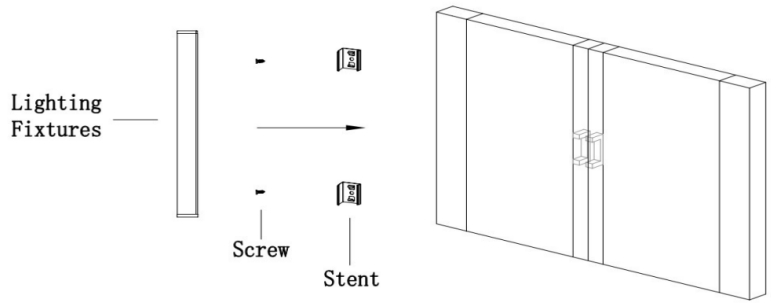

1. The bracket is fixed to the panel, and the light fixture snaps into the bracket.

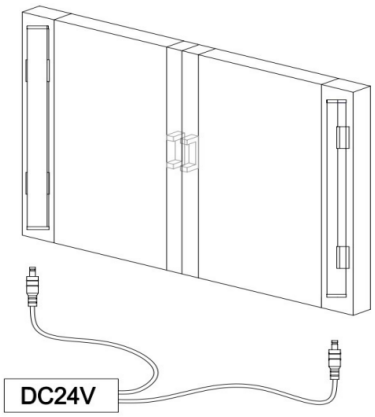

2. Connect the wiring; connect to 24V DC.

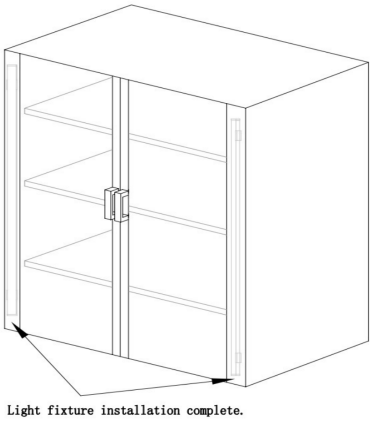

Light fixture installation complete.

Before fixing the light bar

Disconnect power. Confirm that the cabinet material can support the fasteners. Route the cable clear of moving parts and sharp edges.

After installation

Check that the light bar is secure and the connector is fully seated. Confirm connector polarity before switching on.

24 V DC connection

With power disconnected, plug the connecting cable into the light bar and connect it to a 24 V DC supply. Allow power headroom and confirm the maximum run length and total connected load.

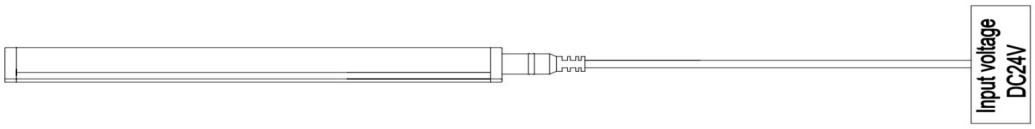

Safety and maintenance

• Disconnect power before cleaning. Avoid corrosive cleaning agents.

• Avoid twisting, dragging or sharply bending the light bar and cable. Avoid prolonged direct viewing while the bar is lit.

• Use qualified personnel for installation, removal, repair and replacement. Obtain approval before modifying circuitry, connectors or internal components.

STANDARD CONFIGURATION

Order No.	Photo	Description	Dimensions (mm)	N.W. (g)
Bracket		Used for fixing and mounting the light fixture/profile.	-	3.3
Connecting cable		Connecting cable between power supply and lights, 1000 mm length.	1000	22
Screw		Steel screws for securing the mounting clips.	-	0.5

OPTIONAL CONFIGURATION

Order No.	Photo	Description	Dimensions (mm)	N.W. (g)
Power Supply		Input: 90-264 VAC. Output: 24V DC.	-	-
L-shaped 1-to-2 connection cable		Two L-shaped plugs, ideal for installation in tight spaces.	L 400	21
1-to-2 connection cable		Simultaneously supplying power to two LED lights.	L 400	21
Cable Grommet		Protects cables from sharp edges when passing through holes.	Ø60 × 22 (Cutout Ø49)	19
Connector		Adapter for connecting two DC male/female plugs together.	Ø5.3 × 20.4	0.8
Wire connector		Used for seamless, end-to-end direct connection of two lights.	L 170	5.8

iPixel LED Light Co., Ltd
Building A, Chezhan industrial park, Tianbao Rd, Shiyan Town, Baoan, Shenzhen, China
www.ipixelleds.com | Technical data: Refrigerated Display Lighting Catalog V1.0, pp. 10-12.

Product packaging

The light bar is placed in a protective sleeve and packed in a carton.

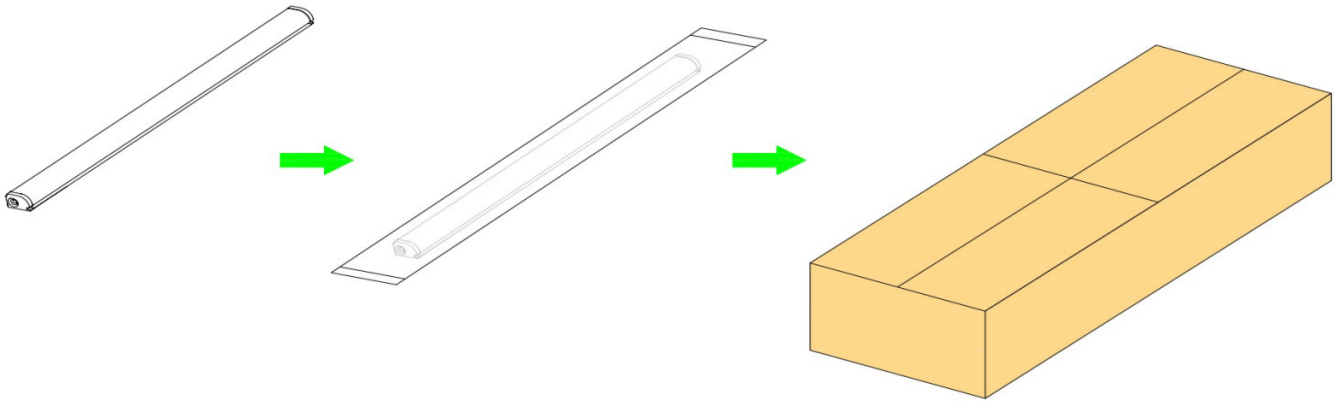

Light bar **Protective sleeve** **Outer carton**

Handling

Avoid dragging, twisting or sharply bending the light bar or cable during packing and handling.