REFRIGERATION LED LIGHTING

ISLAND & HORIZONTAL CASE LIGHTING

B010064BC1H01



DC24V | **IP65** | **CRI ≥90** | **SDCM ≤3** | **120° BEAM**

PRODUCT INTRODUCTION

B010064BC1H01 is designed for island freezers and horizontal refrigerated display cases. Mount the bar beneath the upper frame or along the inside wall to direct light downward and inward toward the merchandise.

APPLICATION AREA

Mount below the upper frame or on an interior side wall. Aim downward and inward.



KEY FEATURES

DC24V low-voltage design

For refrigerated display applications.

120° beam

For wide coverage inside horizontal display cases.

CRI ≥90 / SDCM ≤3

3000K, 4000K and 6500K options.

IP65 / -20°C to +40°C

Rated protection and operating ambient temperature.

Six standard lengths

296-1147 mm; custom lengths available up to 2000 mm.

SUITABLE CABINETS

Island freezers
Chest freezers
Horizontal frozen-food cases

Interior lighting in an island freezer

The light bar mounts below the upper frame or along an interior side wall and directs light downward and inward into the case.



This island freezer shows the horizontal display format and the upper edge used for mounting.

Parameter	Specification
Product Number	B010064BC1H01
Operating Voltage	DC24V
CRI	≥90
Color Consistency	SDCM ≤3
Color Temperature	3000K / 4000K / 6500K
Beam Angle	120°
Luminaire Efficacy	110-120 lm/W, depending on CCT
IP Rating	IP65
Operating Ambient Temperature	-20°C to +40°C
Profile Size (W × H)	17.8 × 10.5 mm
Standard Lengths	296 / 418 / 539 / 661 / 783 / 1147 mm
Custom Length	Available up to 2000 mm
Lifetime	50,000 hours

DIMENSIONAL

Unit: mm

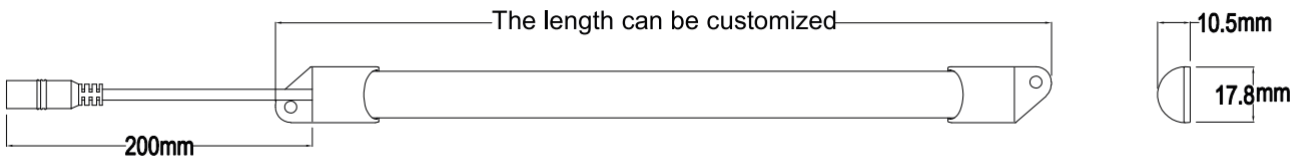

Width: 17.8 mm | Height: 10.5 mm | Lead shown: 200 mm

CUSTOM LENGTH

Custom lengths up to 2000 mm are available.

Technical data source: iPixel Refrigerated Display Lighting Catalog V1.0, pages 41-48.

All rows use model B010064BC1H01. Values within each CCT, flux and efficacy cell correspond from top to bottom.

Model	Power (W) typ.	Input Voltage (V DC)	CRI	CCT (K)	Beam Angle	Luminous Flux (lm)	Luminaire Efficacy (lm/W)	Length (mm)	SDCM	IP	Net Weight (g)
B010064BC1H01	1.5	24	≥90	3000 4000 6500	120°	160 180 180	110 120 120	296	≤3	IP65	23
B010064BC1H01	2.1	24	≥90	3000 4000 6500	120°	230 250 250	110 120 120	418	≤3	IP65	33
B010064BC1H01	2.7	24	≥90	3000 4000 6500	120°	300 320 320	110 120 120	539	≤3	IP65	43
B010064BC1H01	3.3	24	≥90	3000 4000 6500	120°	360 390 390	110 120 120	661	≤3	IP65	52
B010064BC1H01	4	24	≥90	3000 4000 6500	120°	440 480 480	110 120 120	783	≤3	IP65	62
B010064BC1H01	5.8	24	≥90	3000 4000 6500	120°	640 690 690	110 120 120	1147	≤3	IP65	91

Power is typical. Luminous flux and luminaire efficacy are reproduced as listed in the catalog.

OPTICAL DISTRIBUTION & INSTALLATION

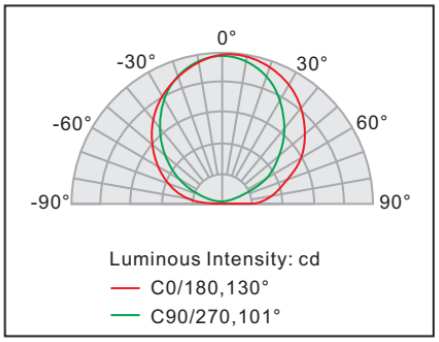

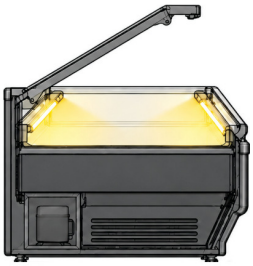

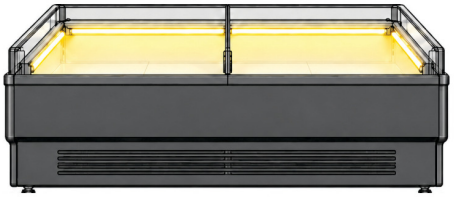

Nominal beam angle: 120°
C0/180: 130°
C90/270: 101°

Mount beneath the upper frame or along the interior side. Aim downward and inward and check clearance around the lid and cable route.

Construction and electrical tolerance

Housing: White polycarbonate (PC). LED package: 2835. Rated power tolerance: ±10%.

Standard mounting hardware: screws for the light bar's mounting tabs. Select the fixing method to suit the cabinet material.

Optional cable: 1000 mm L-shaped connecting cable. Confirm connector compatibility when ordering.

LED quantity by length

Standard length (mm)	LED quantity
296	16
418	24
539	32
661	40
783	48
1147	72

Reference illuminance diagram

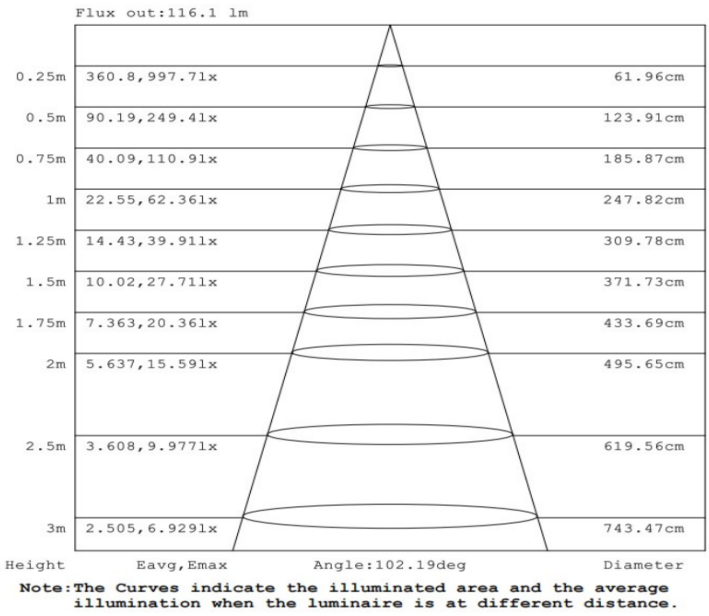

Reference test data from the technical datasheet. Illuminance varies with distance and configuration.

Standards reference

Technical documentation lists UL 2108 and CSA C22.2 No. 250.2 under UL file E509505. Confirm the applicable markings for the ordered configuration. Optical and electrical values are representative and may vary with configuration and operating conditions.

Source: model technical datasheet V1.0 and product instruction manual.

Screw mounting in an island or horizontal case

Secure the light bar with screws beneath the upper frame or along an interior side wall. Aim it down and inward. Check clearance for the lid, track and cable through the lid's full travel.

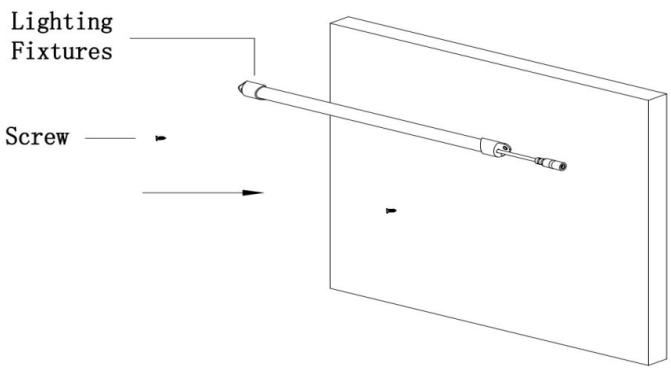

1. Secure the light fixture to the board with screws.

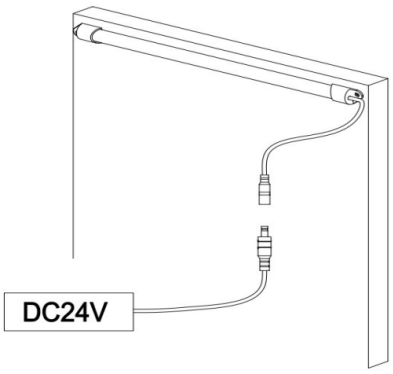

2. Connect the wiring; connect to 24V DC.

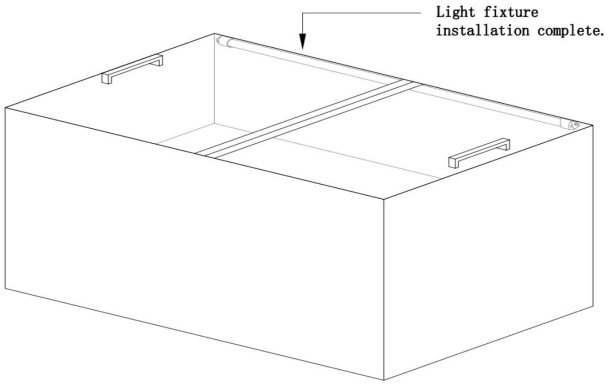

Before fixing the light bar

Disconnect power. Confirm that the cabinet material can support the fasteners. Route the cable clear of moving parts and sharp edges.

After installation

Check that the light bar is secure and the connector is fully seated. Confirm connector polarity before switching on.

24 V DC connection

With power disconnected, plug the connecting cable into the light bar and connect it to a 24 V DC supply. Allow power headroom and confirm the maximum run length and total connected load.

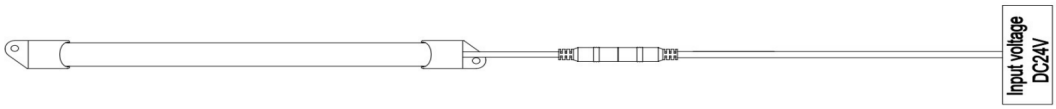

Safety and maintenance

• Disconnect power before cleaning. Avoid corrosive cleaning agents.

• Avoid twisting, dragging or sharply bending the light bar and cable. Avoid prolonged direct viewing while the bar is lit.

• Use qualified personnel for installation, removal, repair and replacement. Obtain approval before modifying circuitry, connectors or internal components.

STANDARD CONFIGURATION

Order No.	Photo	Description	Dimensions (mm)	N.W. (g)
Connecting cable		Connecting cable between power supply and lights, 1000 mm length.	1000	22
Screw		Steel screws for securing the light bar through its mounting tabs.	-	0.5

OPTIONAL CONFIGURATION

Order No.	Photo	Description	Dimensions (mm)	N.W. (g)
Power Supply		Input: 90-264 VAC. Output: 24V DC.	-	-
L-shaped 1-to-2 connection cable		Two L-shaped plugs, ideal for installation in tight spaces.	L 400	21
1-to-2 connection cable		Simultaneously supplying power to two LED lights.	L 400	21
Cable Grommet		Protects cables from sharp edges when passing through holes.	Ø60 × 22 (Cutout Ø49)	19
Connector		Adapter for connecting two DC male/female plugs together.	Ø5.3 × 20.4	0.8
Wire connector		Used for seamless, end-to-end direct connection of two lights.	L 170	5.8

Product packaging

The light bar is placed in a protective sleeve and packed in a carton.

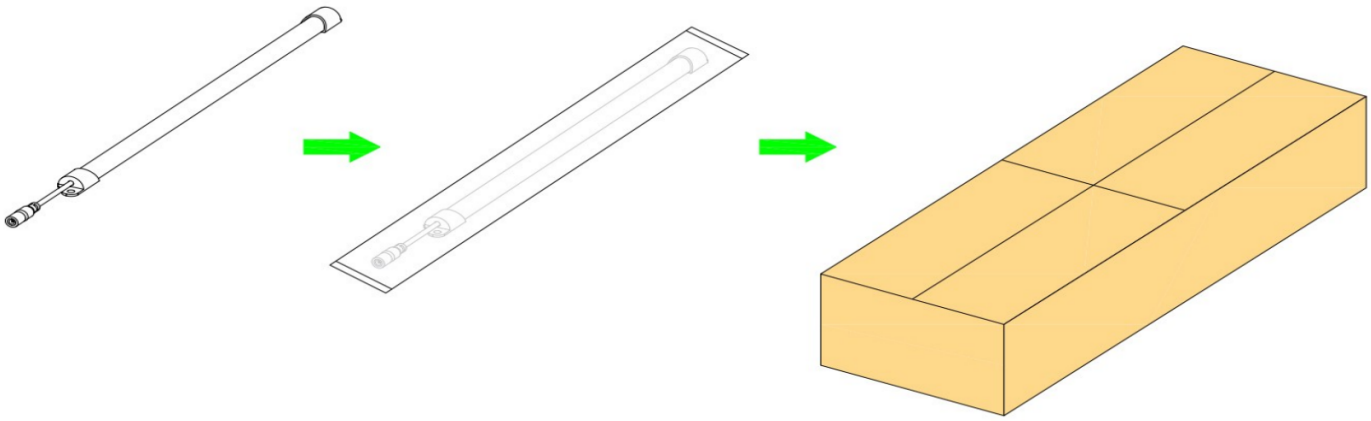

Light bar **Protective sleeve** **Outer carton**

Handling

Avoid dragging, twisting or sharply bending the light bar or cable during packing and handling.