REFRIGERATION LED LIGHTING

MULLION LIGHTING

B012056BC1M01



DC24V | **IP65** | **CRI ≥90** | **SDCM ≤3** | **120° BEAM**

PRODUCT INTRODUCTION

B012056BC1M01 mounts vertically inside the fixed center mullion between two glass doors. Its optic directs light inward toward merchandise near the center of the refrigerated display.

APPLICATION AREA

Mount vertically inside the center mullion. Aim inward toward the merchandise.



KEY FEATURES

DC24V low-voltage design

For refrigerated display applications.

120° beam

For inward illumination from the center door mullion.

CRI ≥90 / SDCM ≤3

3000K, 4000K and 6500K options.

IP65 / -20°C to +40°C

Rated protection and operating ambient temperature.

Eight standard lengths

296-1203 mm; custom lengths available up to 2000 mm.

SUITABLE CABINETS

Glass-door merchandisers
Beverage coolers
Dairy display cabinets
Upright glass-door freezers

Center-mullion lighting in glass-door cabinets

The light bar mounts vertically on a fixed center mullion between two doors to illuminate merchandise near the middle of the cabinet.



The cabinet row shows the glass-door display format used for center-mullion lighting.

Parameter	Specification
Product Number	B012056BC1M01
Operating Voltage	DC24V
CRI	≥90
Color Consistency	SDCM ≤3
Color Temperature	3000K / 4000K / 6500K
Beam Angle	120°
Luminaire Efficacy	100-120 lm/W, depending on length and CCT
IP Rating	IP65
Operating Ambient Temperature	-20°C to +40°C
Profile Size (W × H)	24.4 × 13.4 mm
Standard Lengths	296 / 426 / 555 / 685 / 815 / 944 / 1074 / 1203 mm
Custom Length	Available up to 2000 mm
Lifetime	50,000 hours
Standards Listed in Catalog	UL 2108 / CSA C22.2 No. 250.2

DIMENSIONAL

Unit: mm

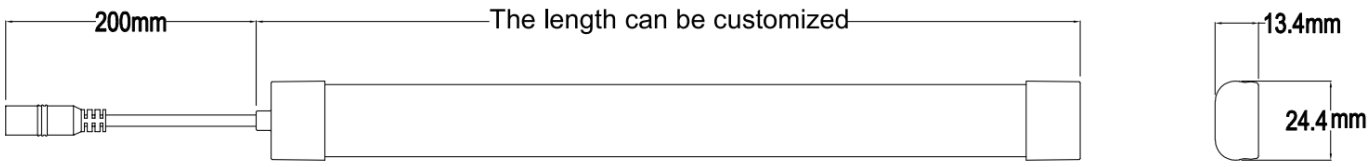

Width: 24.4 mm | Height: 13.4 mm | Lead shown: 200 mm

CUSTOM LENGTH

Custom lengths up to 2000 mm are available.

Technical data source: iPixel Refrigerated Display Lighting Catalog V1.0, pages 33-40.

All rows use model B012056BC1M01. Values within each CCT, flux and efficacy cell correspond from top to bottom.

Model	Power (W) typ.	Input Voltage (V DC)	CRI	CCT (K)	Beam Angle	Luminous Flux (lm)	Luminaire Efficacy (lm/W)	Length (mm)	SDCM	IP	Net Weight (g)
B012056BC1M01	1.5	24	≥90	3000 4000 6500	120°	160 180 180	110 120 120	296	≤3	IP65	40
B012056BC1M01	2.2	24	≥90	3000 4000 6500	120°	240 260 260	110 120 120	426	≤3	IP65	58
B012056BC1M01	2.8	24	≥90	3000 4000 6500	120°	310 330 330	110 120 120	555	≤3	IP65	75
B012056BC1M01	3.5	24	≥90	3000 4000 6500	120°	380 420 420	110 120 120	685	≤3	IP65	93
B012056BC1M01	4	24	≥90	3000 4000 6500	120°	440 490 490	110 120 120	815	≤3	IP65	110
B012056BC1M01	4.8	24	≥90	3000 4000 6500	120°	520 570 570	110 120 120	944	≤3	IP65	128
B012056BC1M01	5.5	24	≥90	3000 4000 6500	120°	600 660 660	110 120 120	1074	≤3	IP65	145
B012056BC1M01	6	24	≥90	3000 4000 6500	120°	600 660 660	100 110 110	1203	≤3	IP65	163

Power is typical. Luminous flux and luminaire efficacy are reproduced as listed in the catalog.

OPTICAL DISTRIBUTION & INSTALLATION

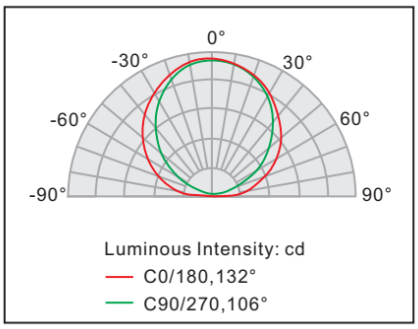

Nominal beam angle: 120°
C0/180: 132°
C90/270: 106°



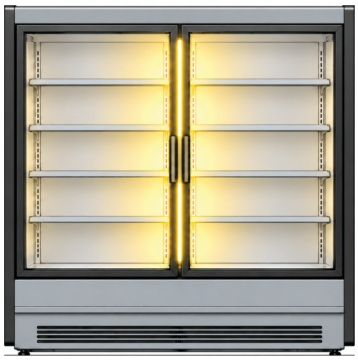

Mount in the fixed center mullion and aim light inward. Allow clearance for the brackets, lead and both moving doors.

Construction and electrical tolerance

Housing: White polycarbonate (PC). LED package: 2835. Rated power tolerance: ±10%.

Clip-and-screw sets per bar: 2 up to 1 m, 3 over 1 m through 1.5 m, and 4 over 1.5 m through 2 m.

Optional cable: 1000 mm L-shaped connecting cable. Confirm connector compatibility when ordering.

LED quantity by length

Standard length (mm)	LED quantity
296	16
426	24
555	32
685	40
815	48
944	56
1074	64
1203	72

Reference illuminance diagram

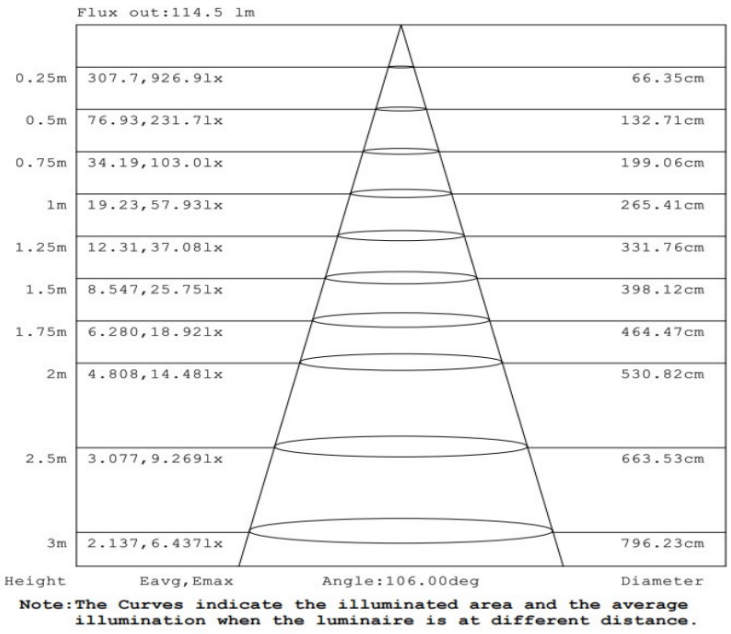

Reference test data from the technical datasheet. Illuminance varies with distance and configuration.

Standards reference

Technical documentation lists UL 2108 and CSA C22.2 No. 250.2 under UL file E509505. Confirm the applicable markings for the ordered configuration. Optical and electrical values are representative and may vary with configuration and operating conditions.

Source: model technical datasheet V1.0 and product instruction manual.

Clip mounting on the fixed center mullion

Screw the clips onto the cabinet-side face of the fixed center mullion, then snap in the light bar. Aim the light inward and check that the fittings and cable clear both doors.

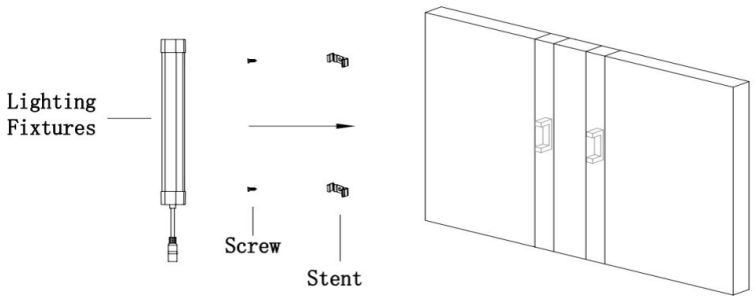

1. The bracket is fixed to the panel, and the light fixture snaps into the bracket.

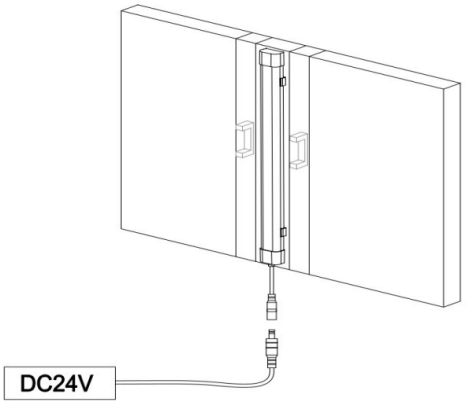

2. Connect the wiring; connect to 24V DC.

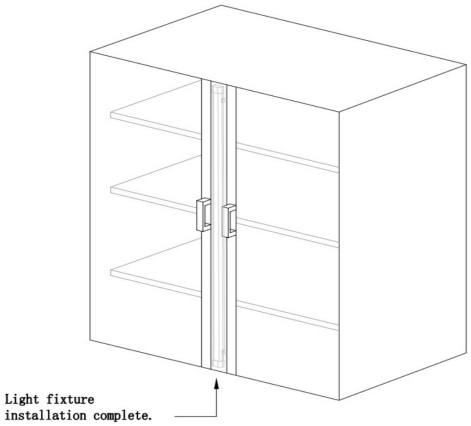

Before fixing the light bar

Disconnect power. Confirm that the cabinet material can support the fasteners. Route the cable clear of moving parts and sharp edges.

After installation

Check that the light bar is secure and the connector is fully seated. Confirm connector polarity before switching on.

24 V DC connection

With power disconnected, plug the connecting cable into the light bar and connect it to a 24 V DC supply. Allow power headroom and confirm the maximum run length and total connected load.

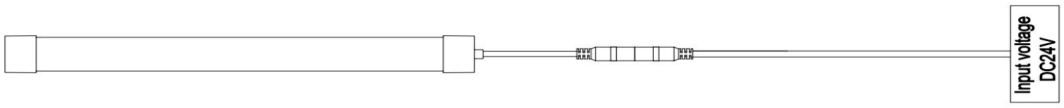

Safety and maintenance

• Disconnect power before cleaning. Avoid corrosive cleaning agents.

• Avoid twisting, dragging or sharply bending the light bar and cable. Avoid prolonged direct viewing while the bar is lit.

• Use qualified personnel for installation, removal, repair and replacement. Obtain approval before modifying circuitry, connectors or internal components.

STANDARD CONFIGURATION

Order No.	Photo	Description	Dimensions (mm)	N.W. (g)
Bracket		Used for fixing and mounting the light fixture/profile.	-	0.8
Connecting cable		Connecting cable between power supply and lights, 1000 mm length.	1000	22
Screw		Steel screws for securing the mounting clips.	-	0.5

OPTIONAL CONFIGURATION

Order No.	Photo	Description	Dimensions (mm)	N.W. (g)
Power Supply		Input: 90-264 VAC. Output: 24V DC.	-	-
L-shaped 1-to-2 connection cable		Two L-shaped plugs, ideal for installation in tight spaces.	L 400	21
1-to-2 connection cable		Simultaneously supplying power to two LED lights.	L 400	21
Cable Grommet		Protects cables from sharp edges when passing through holes.	Ø60 × 22 (Cutout Ø49)	19
Connector		Adapter for connecting two DC male/female plugs together.	Ø5.3 × 20.4	0.8
Wire connector		Used for seamless, end-to-end direct connection of two lights.	L 170	5.8

Product packaging

The light bar is placed in a protective sleeve and packed in a carton.

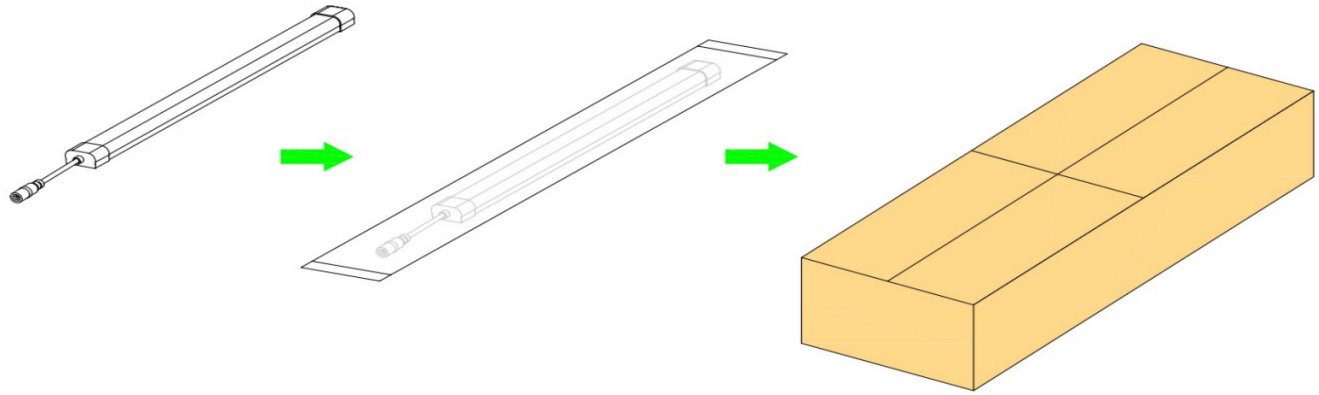

Light bar **Protective sleeve** **Outer carton**

Handling

Avoid dragging, twisting or sharply bending the light bar or cable during packing and handling.