iPixel®

WhatsAPP:
0086-150-1941-4524

Skype ID:
ipixelled

Website

Wechat

iPixel LED Light Co.,Ltd

Email : inquiry@ipixelleds.com
Wed : www.ipixelleds.com
Tel : 0086-755-8525-7292
Fax : 0086-755-8525-9059
Add: 7F, Mingjinhai Complex Building, Tangtou Rd, Shiyan Town, Baoan, Shenzhen, China. 518108
Tel: 0086-755-85257292 Web: www.ipixelleds.com E-mail: inquiry@ipixelleds.com

Five Light solutions - Smart whole house

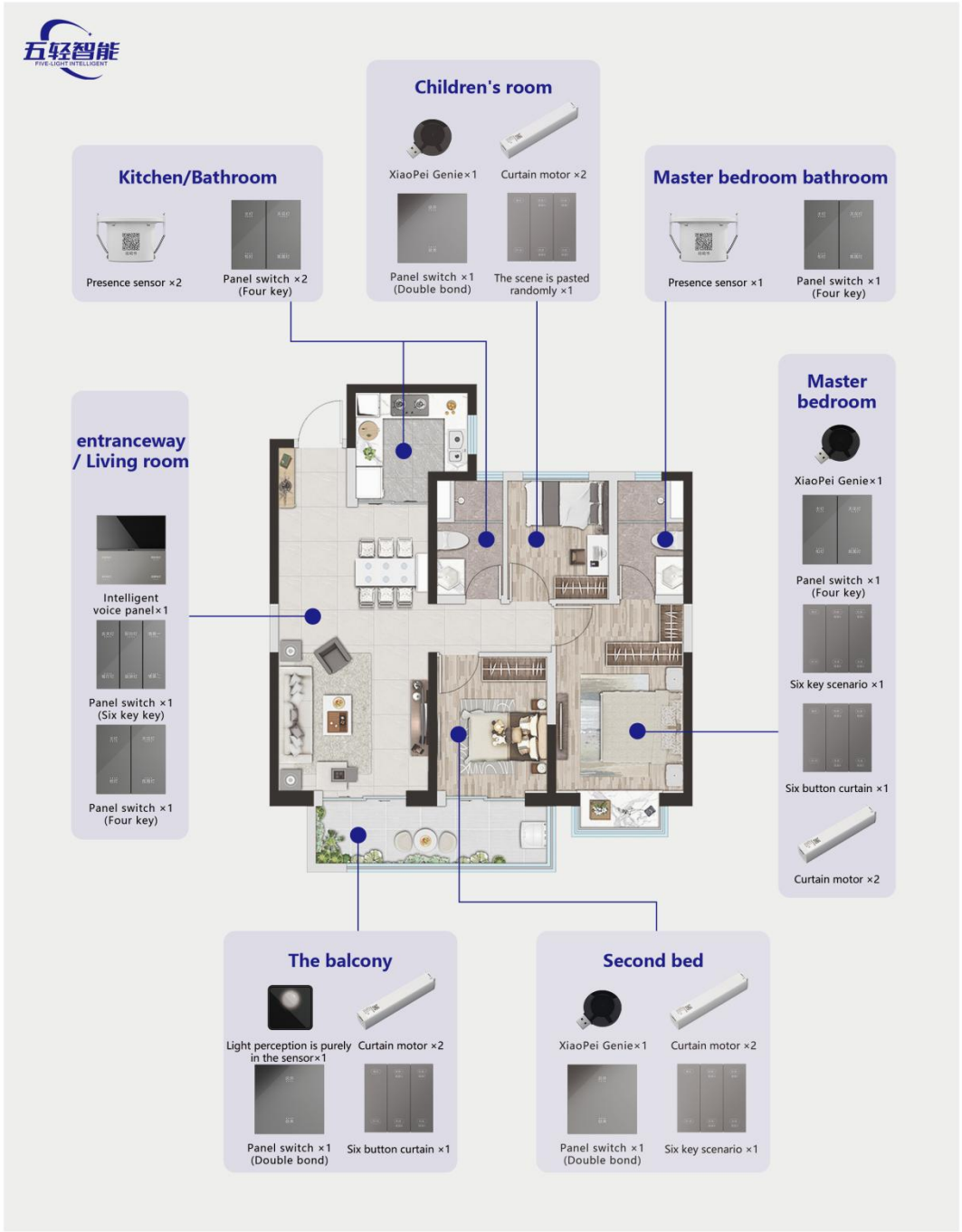

List of assembly

- Intelligent voice panel ×1
- Intelligent panel switch (six keys) ×1
- Intelligent panel switch (four keys) ×3
- Intelligent panel switch (four keys and three channels) ×2
- Intelligent panel switch (on + off) ×3
- Intelligent presence sensor ×3
- Intelligent light sensor exists sensor ×1
- Six-key situational remote control panel ×3
- Six-button curtain remote control panel ×3
- XiaoPei Genie×3
- Intelligent curtain motor×8

Features and Functions

Five Light Assembly Whole House Smart System Equipped with a multi-mode smart control center, switch freely among mobile touch, voice commands, smart induction, and physical buttons for unconstrained operation! Dual-color temperature lighting adjusts at will—welcome lights in home mode, warm sleep-aid light at night—all atmosphere under control. 8 groups of (whole-house) lights can be independently controlled, supporting scene modes: automatically activate warm welcome lights, or switch to viewing mode with one key to dim lights for immersive ambiance. Integrating cutting-edge tech and convenience, it creates your smart, comfy ideal home!

- Voice control
- phone control
- Off line control
- RGBCW transformation
- Scenario model
- Easy to install

Five light solution - Mijia intelligent whole house

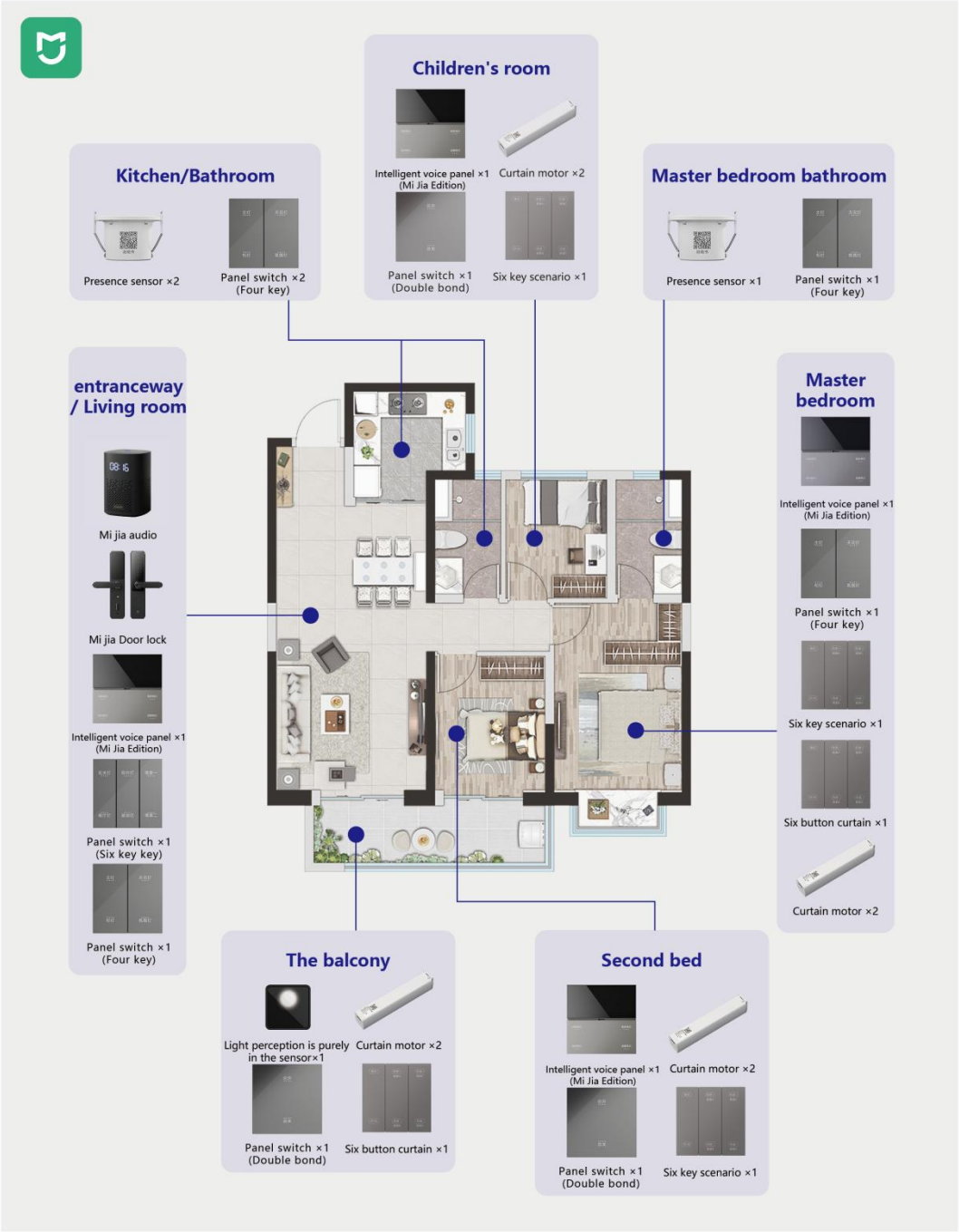

List of assembly

- Intelligent voice panel (Mijia version) ×4
- Intelligent panel switch (six keys) ×1
- Intelligent panel switch (four keys) ×3
- Intelligent panel switch (four keys and three channels) ×2
- Intelligent panel switch (on + off) ×3
- Mi home door lock ×1
- Intelligent light sensor exists sensor ×1
- Six-key situational remote control panel ×3
- Six-button curtain remote control panel ×3
- Intelligent curtain motor×8
- Intelligent presence sensor ×3
- Mi home audio ×1

Features and Functions

Five Light Assembly Whole House Smart System

Deeply integrated into the MIJIA ecosystem with a multimodal smart control hub, enabling free switching between mobile app, voice commands, smart sensing, and physical button controls. Smartly linked with MIJIA door locks, warm welcome lights auto-activate upon unlocking. Voice commands via XiaoAI trigger whole-house lighting scenes—one tap for sleep mode with warm night lights or dimmed lights for movie immersion. 8 groups of lights are individually controllable, paired with MIJIA speakers for rich scenario modes. Combining cutting-edge tech and convenience, it creates a comfy, efficient smart home via intelligent linkage.

- Voice control
- phone control
- Off line control
- RGBCW transformation
- Scenario model
- Easy to install

Five light solution - TUYA intelligent whole house

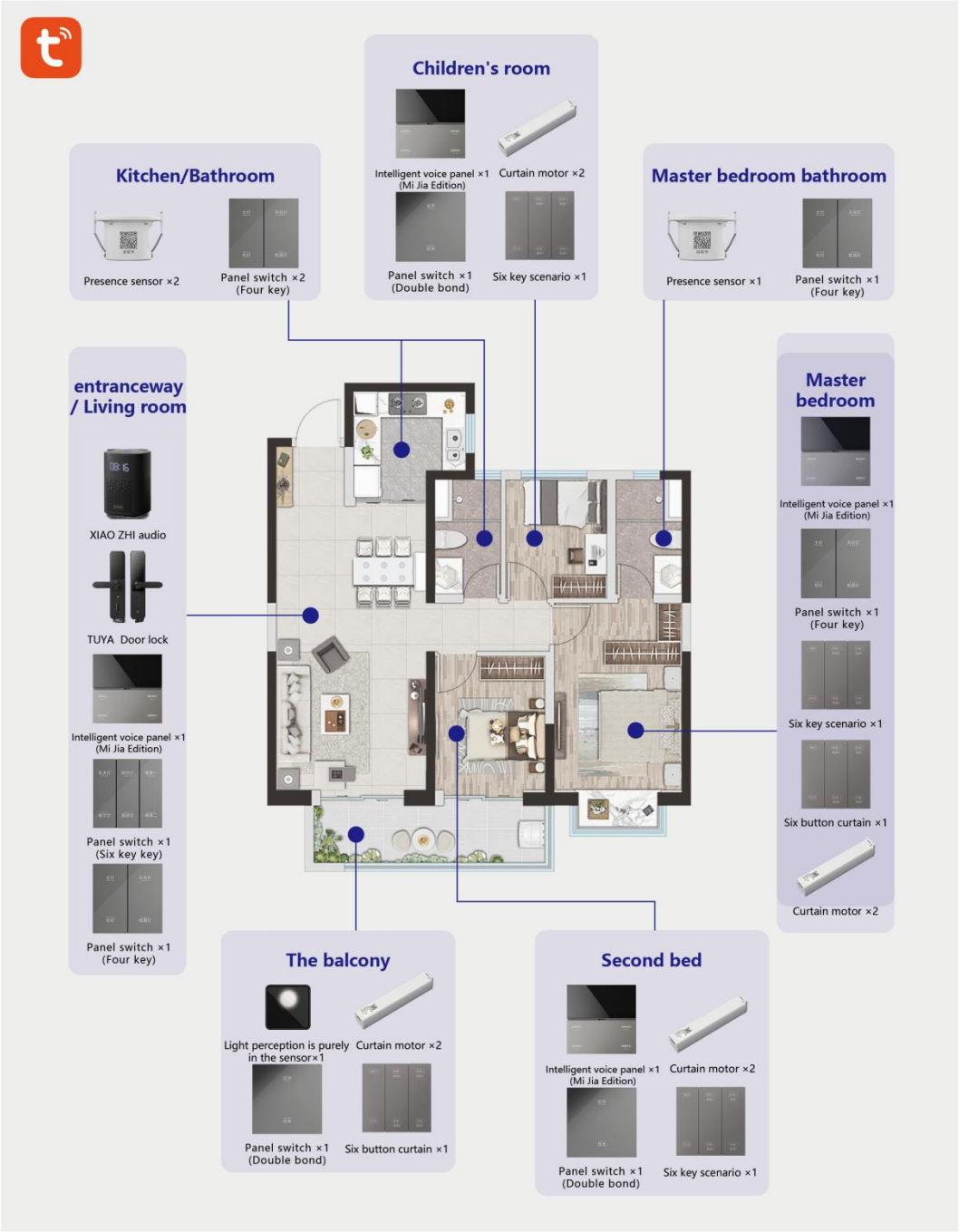

List of assembly

- Intelligent voice panel (Mijia version) ×4
- Intelligent panel switch (six keys) ×1
- Intelligent panel switch (four keys) ×3
- Intelligent panel switch (four keys and three channels) ×2
- Intelligent panel switch (on + off) ×3
- TUYA door lock ×1
- Intelligent light sensor exists sensor ×1
- Six-key situational remote control panel ×3
- Six-button curtain remote control panel ×3
- Intelligent curtain motor×8
- Intelligent presence sensor ×3
- Xiao Zhi home audio ×1

Features and Functions

Five Light Assembly Whole House Smart System Deeply integrated into the Tuya ecosystem with a multimodal smart control hub, enabling free switching between mobile app, voice commands, smart sensing, and physical button controls. Thanks to Tuya's strong device compatibility, no worries about adaptation—easily achieve deep linkage between smart door locks and (whole-house) devices. Unlocking the door activates warm welcome mode; voice commands trigger scenes like sleep mode with warm night lights or dimmed lights for movie immersion. 8 groups of lights are individually controllable, paired with Tuya speakers for rich scenario modes. Combining cutting-edge tech and convenience, it creates a comfy, efficient smart home via intelligent linkage.

- Voice control
- phone control
- Off line control
- RGBCW transformation
- Scenario model
- Easy to install

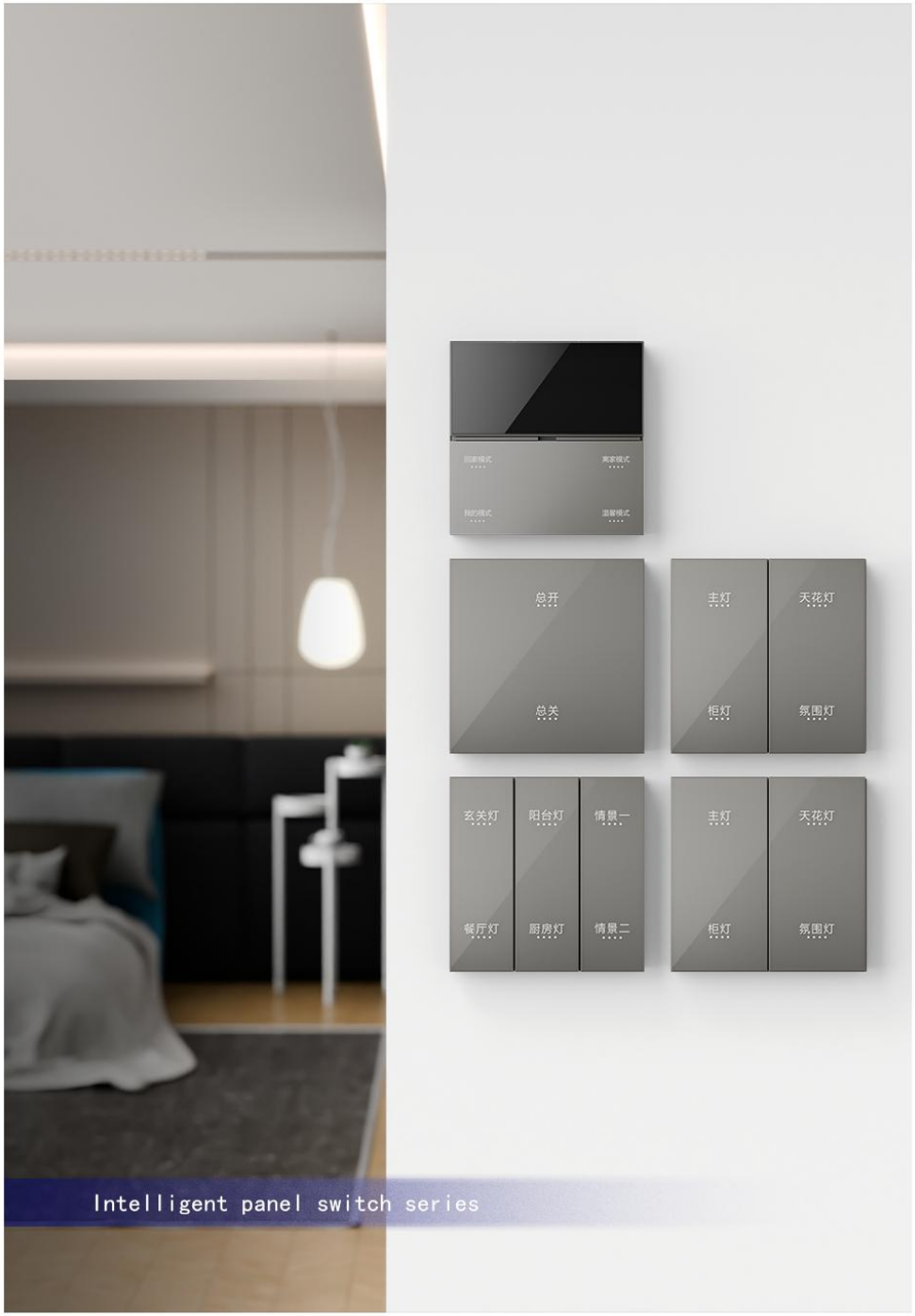

Intelligent panel switch series

Product description:

- Common on-off switch + intelligent switch in one
  Physical power failure is safer;
  Wireless multi-control: can be wirelessly paired by other remote control, small program or panel control,
  Easy wireless multi-control
  The total on/off function wirelessly controls other smart power supplies or smart panel sub-controls.
  Can be controlled by a variety of products, control methods.
  Can customize the product screen printing

Product name	Intelligent panel switch
Product Category	Panel switch
Control mode	2.4G/ Bluetooth/physical button
Control distance	20M
Packing method	boxed
Product size	86*86*39.5 mm
Packing quantity	50 pieces/box
Wiring method	Zero fire double wire,
Input voltage	100-240VAC 50/60Hz
Maximum current	Single channel 8A MAX
Function type	Voice, mode, color, dimming
	Lights, curtains, air conditioning
Appearance selection	Skin/Glass /PC

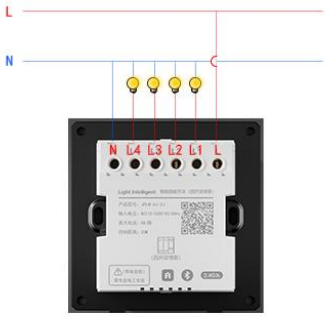



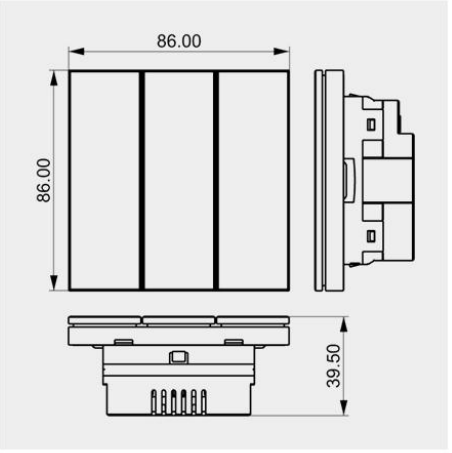

INTELLIGENT VOICE PANEL

Intelligent curtain motor

Product description:

- Offline voice, no network is more convenient
  Voice on and off lights, dimming, color, control curtains, air conditioning
  Free combination centralized control, grouping
  Custom wake up and light on and off commands
  Customize the home mode
  Voice + key dimming color dual mode
  Open Home/Away mode with one click

Product name	Intelligent voice panel
Product Category	Voice panel
Control mode	2.4G/ Bluetooth/infrared
Control distance	20M
Packing method	boxed
Product size	86*86*39.5 mm
Packing quantity	50 pieces/box
Wiring method	Zero fire double wire,
Input voltage	100-240VAC 50/60Hz
Output voltage	/
Function type	Voice, mode, color, dimming
	Lights, curtains, air conditioning
Appearance selection	Skin/Glass /PC





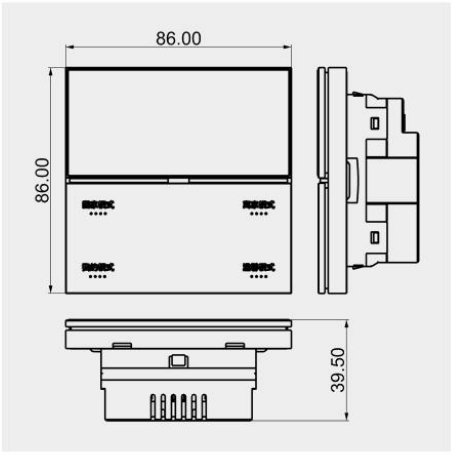

INTELLIGENT CURTAIN MOTOR

Intelligent cur

Product description:

- Appearance The body is made of aluminum alloy with exquisite surface treatment, and all hardware accessories such as transmission and output shafts are made of stainless steel.
- Internal transmission structure The motor uses pure copper DC motor for longer life, self-developed gearbox 30 to 1 design torque is greater, self-developed clutch, the separation state does not jam, power output does not slip, minus 20 degrees Celsius to high temperature 80 degrees Celsius are stable and reliable operation.
- Control board Motor drive using stable relay drive program, intelligent interface is serial protocol communication docking, more convenient nowadays intelligent product system docking.
- Power supply board, PCB board is the choice of double-sided board process is more stable, power enough, multiple filter protection, anti-surge 5000V.





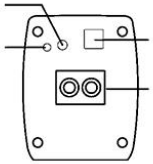

Intelligent curtain motor series parameter table

Name of product	Intelligent curtain motor	Body weight	0.88KG/0.95KG
Category of Products	Curtain curtain motor	product size	296*59*50(MM)
Remote control mode	2.4G/ Bluetooth	Quantity of packing	50
Remote control mode	1.2Nm/2.0Nm	Voltage of input	AC100V-250V
Distance of control	20M	Maximum power output	45W/75W
Method of packing	In a box	Type of function	Curtain/screen curtain opening and closing control



XIAOPEI GENIE

Product description:

- Intelligent voice control, whether it is adjusting lights, switching air conditioning, or playing TV, mode control,Intelligent situational voice controllers can respond instantly, making your home life more convenient and efficient.
- Customize a variety of life scene modes, such as "Home mode" automatically turn on custom preset lights,Air conditioning, as well as personal mode and other control modes, make your life more intimate and comfortable.
- Can control lights, air conditioning, TV, set-top box, fan lights, curtain control, in addition, There is a scenario mode to customize the state of the above devices, just one sentence to enter the scene atmosphere.



XIAOPEI GENIE

XIAOPEI GENIE

Product name	XIAOPEI GENIE	Product size	44 * 16 * 55.5 (mm)
Product category	Intelligent situational voice controller	Class of protection	IP20
Connection mode	Wireless connection	Packing quantity	100 pieces/box
Control mode	Wireless 2.4GHz/ Bluetooth	Working environment	-20°C~+45°C
Packing method	boxed	Operating voltage	USB-A male 5V1A
Functional category	Can control lighting, air conditioning, TV, set-top box, fan light, scene function		

INTELLIGENT PRESENCE OF INDUCTIVE SWITCH



Intelligent presence of inductive switch

Product description:

- High-Precision Detection: Capable of accurately detecting human movement, enabling intelligent lighting control that turns lights on when people are present and off when they leave.
- Flexible Settings: Supports multiple adjustable settings for sensing sensitivity, delay functions, and more, catering to diverse application scenarios and user needs.
- Versatile Applications: Ideally suited for indoor spaces requiring frequent movement and complex environments, such as staircases, corridors, and hallways.
- Smart Interconnectivity: Some models are compatible with other smart home devices, enhancing the level of home intelligence and integration.





Intelligent presence of inductive switch

Intelligent presence of inductive switch

Product name	Intelligent presence of inductive switch	Pilot lamp	blue
Product category	Induction switch	Class of protection	IP20
Connection mode	Zero firewire connection	Packing quantity	100 pieces/box
Opening diameter	Medium 50mm	Temperature range	-20'C~+45'C
Starting photosensitivity	On/Off	Operating voltage	220V/50HZ/100V/60HZ
Packing method	boxed	Sensing distance	100% / 75% / 50% / 25%
Product category	Controllable remote control: small intelligent series controller, 2.4G intelligent controller, etc		

LED INTELLIGENT POWER SERIES-03



03 intelligent two-color two-wire centralized control power supply

Product description:

- Ultra-thin 17mm thickness smart power
- High Current Terminal
- Overload indication, green light for normal work, red light for overloaded work (not recommended for overloaded use)
- no flash after overload, light dim, can work normally.
- can be a variety of product control, control mode
- power supply can be wired/Wireless Control Switch
- two-color two-wire intelligent color mixing



03 36W　　03 60W　　03 100W

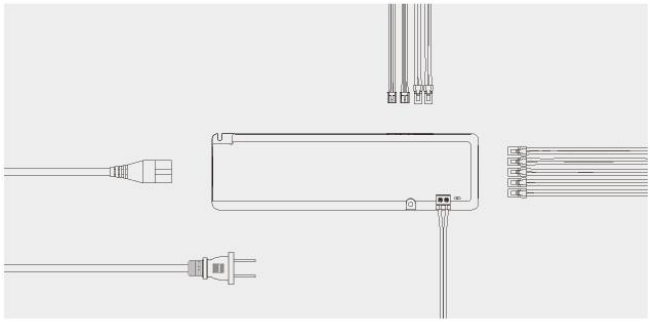

Models	Input	Output	Size	Color	Output Terminal
JP-12V-36W-03	AC170-220V 50Hz	DC12V 3A 36W	150*60*17mm	Black	Output Dupont Terminal * 5 centralized control terminal * 1
JP-24V-36W-03		DC12V 1.5A 36W			
JP-12V-60W-03	AC170-220V 50Hz	DC12V 5A 60W	180*60*17mm		Output Dupont Terminal * 8 centralized control terminal * 1
JP-24V-60W-03		DC24V 2.5A 60W			
JP-12V-100W-03	AC170-220V 50Hz	DC12V 8.3A 100W	210*60*17mm		Output Dupont Terminal * 7 centralized control terminal * 2
JP-24V-100W-03		DC24V 4.1A 100W			
Controllable remote control: Tmall Speaker, elegant light control, small intelligent series controller, 2.4 G intelligent Controller, etc.					

LED INTELLIGENT POWER SERIES-03

03 smart monochrome lamp centralized control power supply

Product description:

- Ultra-thin 17mm thickness smart power
- High Current Terminal
- Overload indication, green light for normal work, red light for overloaded work (not recommended for overloaded use)
- no flash after overload, light dim, can work normally.
- can be a variety of product control, control mode
- power supply can be wired/Wireless Control Switch
- Intelligent dimming control



03 36W　　03 60W　　03 100W

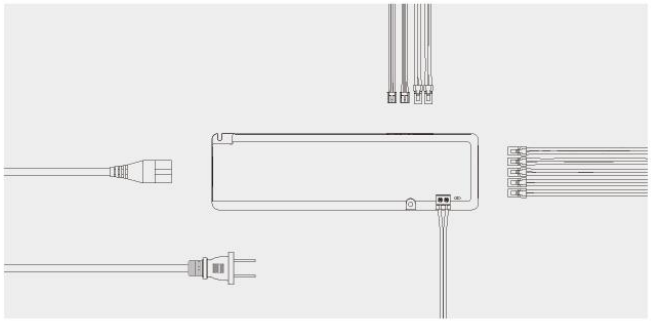

Models	Input	Output	Size	Color	Output Terminal
JP-12V-36W-03	AC170-220V 50Hz	DC12V 3A 36W	150*60*17mm	Black	Output Dupont Terminal * 5 centralized control terminal * 1
JP-24V-36W-03		DC12V 1.5A 36W			
JP-12V-60W-03	AC170-220V 50Hz	DC12V 5A 60W	180*60*17mm		Output Dupont Terminal * 8 centralized control terminal * 1
JP-24V-60W-03		DC24V 2.5A 60W			
JP-12V-100W-03	AC170-220V 50Hz	DC12V 8.3A 100W	210*60*17mm		Output Dupont Terminal * 7 centralized control terminal * 2
JP-24V-100W-03		DC24V 4.1A 100W			

Controllable remote control: Tmall Speaker, elegant light control, small intelligent series controller, 2.4 G Intelligent Controller, etc.

03 LED wardrobe centralized control power supply

Product description:

- Ultra-thin 17mm thickness smart power
- High Current Terminal
- Overload indication, green light for normal work, red light for overloaded work (not recommended for overloaded use)
- no flash after overload, light dim, can work normally.
- can be a variety of product control, control mode
- power supply can be wired/Wireless Control Switch



03 36W　　03 60W　　03 100W

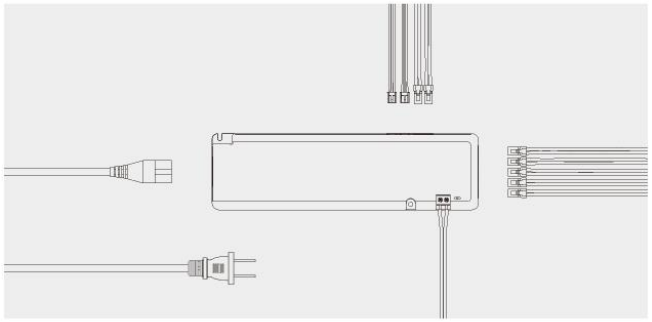

Models	Input	Output	Size	Color	Output Terminal
JP-12V-36W-03	AC170-220V 50Hz	DC12V 3A 36W	150*60*17mm	White	Output Dupont Terminal * 5 centralized control terminal * 1
JP-24V-36W-03		DC12V 1.5A 36W			
JP-12V-60W-03	AC170-220V 50Hz	DC12V 5A 60W	180*60*17mm		Output Dupont Terminal * 8 centralized control terminal * 1
JP-24V-60W-03		DC24V 2.5A 60W			
JP-12V-100W-03	AC170-220V 50Hz	DC12V 8.3A 100W	210*60*17mm		Output Dupont Terminal * 7 centralized control terminal * 2
JP-24V-100W-03		DC24V 4.1A 100W			

Controllable Remote Control: Wireless/wired remote control, 2.4 G intelligent remote control (classic)

2.4 G WIRELESS SENSOR SWITCH



2.4 G wireless sensor switch

Product description:

- Innovative appearance, eye-catching glossy effect, highlighting the extraordinary quality.
- Compact base, silky smooth installation, does not pinch the hand.
- 2.4G wireless reception, sensitive and sturdy stability.
- Compact size, eye-catching appearance, highlighting the light and shadow levels, hands-on experience of advanced sense.
- Linkage with Light Intelligent Series, bringing new experience of intelligence and convenience.
- Can be used with smart power supply and ordinary power supply (receiver required).



022.4 g touch sensor



022.4g hand-scan gated sensor



022.4 g human body sensor

02 2.4 g wireless sensor series parameter table

Product name	02 2.4 g wireless sensor	Lights	Charging red light, full green light, running blue light
Product category	Wireless induction switch	Product dimensions	45*45*10(MM)
Connection mode	2.4 g/Bluetooth	boxes packed	50/box
Control category	Hand sweep gating/touching/body	Connection mode	2.4G
Receiving distance	8M	Charging port	TYPE-C
Packing method	Boxed	Charging voltage	5V 1A

INTELLIGENT DOWNLIGHT POWER SUPPLY SERIES



Intelligent downlight power supply series

Product description:

- Able to support two color temperature adjustment, can provide two lighting effects of cold light and warm light according to different environments and needs, creating a comfortable environment.
- Support a variety of intelligent control methods, cell phone APP control, voice control, 2.4G controller, etc., which is convenient for users to adjust the lighting effect anytime and anywhere to improve the quality of life.

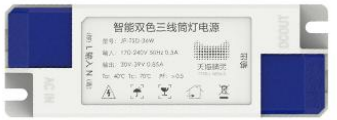

Intelligent two-color three-wire downlight power supply 36W



Intelligent two-color three-wire downlight power supply 18W



Intelligent two-color three-wire downlight power supply 10W

Model number	input	exportation	dimension	colour	Output wire
JP-TSD-36W	AC170-220V 50Hz	30-39V 0.85A	114*40*28mm	White and blue shell	Three-wire casing
JP-TSD-18W	AC170-220V 50Hz	30-39V 0.5A	97*34*25mm		Three-wire casing
JP-TSD-10W	AC170-220V 50Hz	30-39V 0.28A	97*34*25mm		Three-wire casing
Controllable remote control: Tmall speaker, Yaguang light control, small intelligent series controller, 2.4G intelligent controller, etc					

INTELLIGENT RGBCW CONTROLLER (ULTRA-THIN)

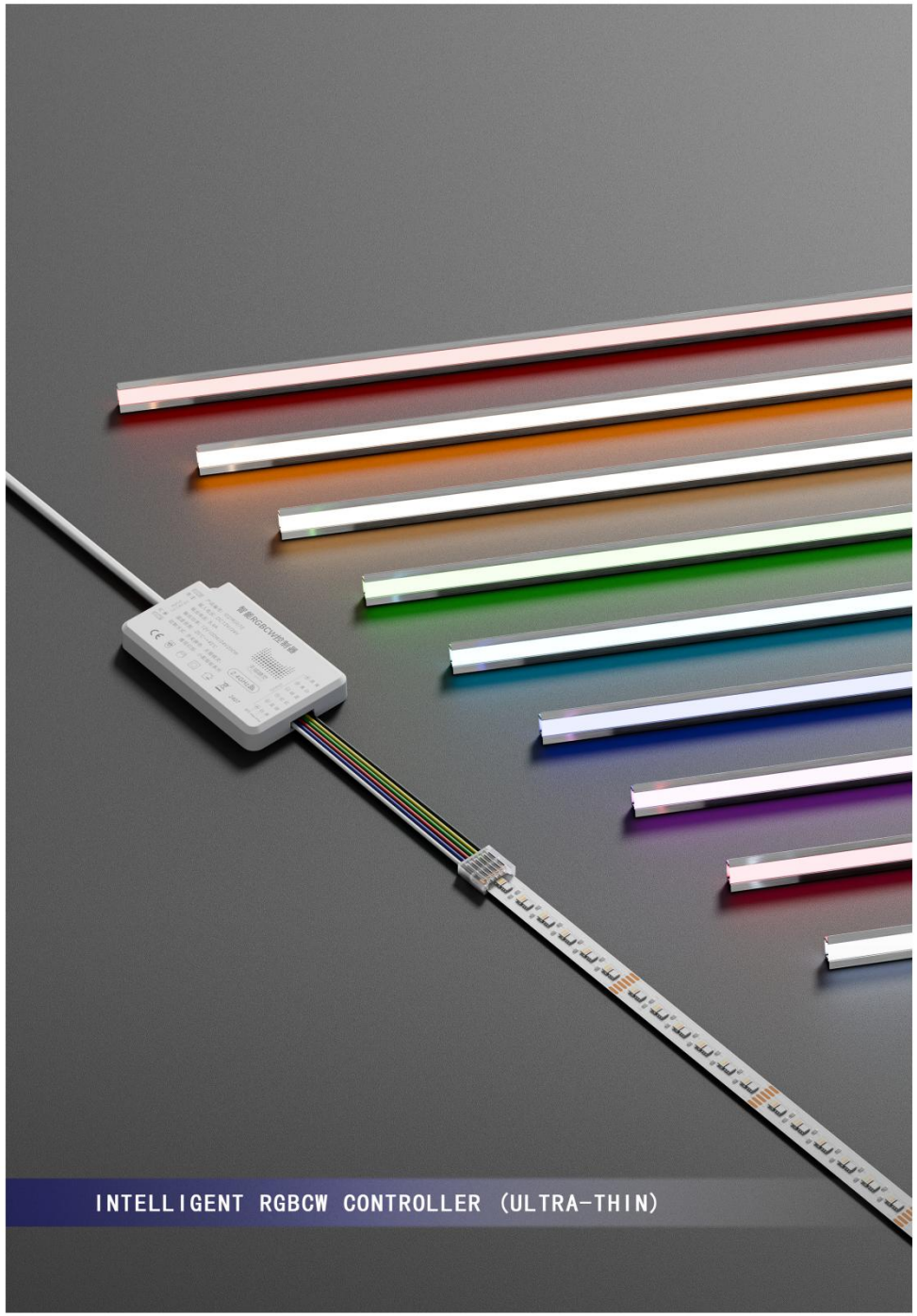

Intelligent RGBCW Controller (Ultra-thin)

Product description:

- Colorful and dazzling lighting effects, with RGB mode supporting 9 color changes and CW mode controlling warm and cool light, enabling the mixing of various colors and color temperatures to meet diversified lighting needs.
- Intelligent control and convenient operation, paired with the Jinpei LightSmart lighting series remote control, realize wireless control, voice control, and light manipulation anytime, anywhere, simplifying the operation process and creating a unique lighting environment tailored to you.
- Ultra-slim and elegant appearance, with a height of only 10mm and an extremely compact body, it effortlessly blends into your home space, allowing you to immediately enjoy the convenience and comfort of intelligent lighting.





Intelligent RGBCW Controller (Ultra-thin)

Intelligent RGBCW Controller (Ultra-thin)			
Product name	Intelligent RGBCW Controller (Ultra-thin)	Product size	80*48*10(mm)
Product category	Intelligent controller	Class of protection	IP20
Connection mode	Wired connection	Packing quantity	100 pieces/box
Control mode	Wireless 2.4GHz/ Bluetooth	Working environment	- 20 ℃ ~ + 45 ℃
Mode switching	RGB mode /CW mode switch	Operating voltage	12V100W/24V200W
Packing method	boxed	Output current	Maximum output current 8.4A
Product category	Controllable remote control: small intelligent series controller, 2.4G intelligent controller, etc		

INTELLIGENT LED BRANCH CONTROL BOX SERIES



Intelligent LED branch control box series

Product description:

- Can be used with ordinary power supply to easily manage the two-color lamps and lanterns.You can enjoy the charm of dual-color lighting.
- Intelligent color temperature control from cool white to warm white, as you wish, to create different atmosphere.from cool white to warm white, create different atmosphere as you wish.
- Multi-port output, 8 groups of fixtures, to meet the needs of complex light light layout to meet the needs of complex lighting layout, creating a personalized lighting space.
- Seamless connection with Light Intelligent 2.4G series controller.Support wireless/wired connection.

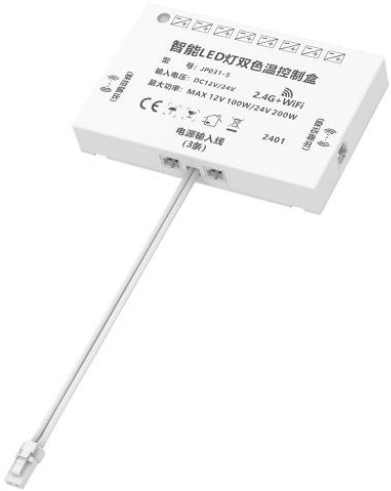

Intelligent LED branch control box series

Intelligent LED branch control box series			
Product name	Intelligent LED light two-color temperature control box	Pilot lamp	/
Product category	Intelligent branch control box	Number of ports	Centralized control port :2 Output ports :8
Connection mode	3P terminal cable	Packing quantity	100 pieces/box
Control mode	Wired/Wireless /2.4G	Centralized control terminal	- + S / + S - / - S + Can be customized
Wire length	customizable	Connection mode	Dupont terminal wire
Packing method	boxed	Maximum power	DC12100W / 24V200W
Control class	Controllable remote control: Tmall speaker, Yaguang light control, small intelligent series controller, 2.4G intelligent controller, etc		

BIPOLAR POWER SUPPLY SERIES-05



05 bipolar wardrobe centralized control power supply

Product description:

- Bipolar forward and reverse plugable closet cabinet centralized power supply.
- Multi-port output, powerful power.
- Three centralized control polarity: -+S/+S-/-S+.
- Can be controlled by a variety of products, a variety of control methods.
- Power supply can be wired/wireless control switch at the same time.
- Simple appearance design, fashionable and generous.

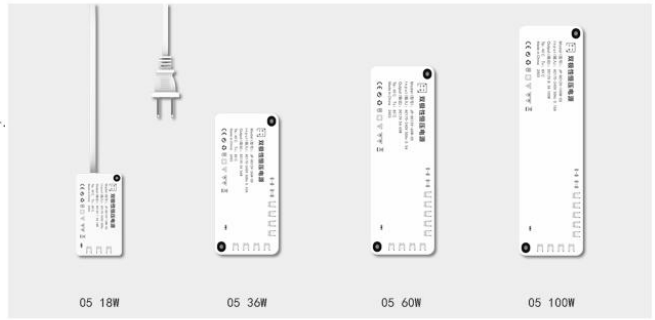

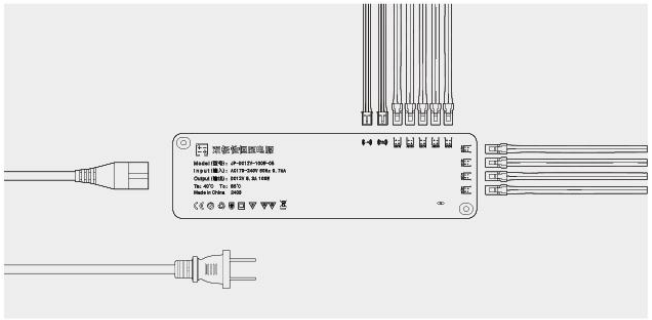

型号	输入	输出	尺寸	颜色	输出端子
JP-12V-18W-05	AC170-220V 50Hz	DC12V 1.5A 18W	72*40*16.5mm	White	Bipolar output dupont terminal * 3
JP-24V-18W-05		DC12V 0.7A 18W			
JP-12V-36W-05	AC170-220V 50Hz	DC12V 3A 36W	125*56*20mm		Bipolar output dupont terminal * 8 bipolar centralized control terminal * 1 centralized control terminal * 1
JP-24V-36W-05		DC12V 1.5A 36W			
JP-12V-60W-05	AC170-220V 50Hz	DC12V 5A 60W	165*56*20mm		Bipolar output dupont terminal * 9 bipolar centralized control terminal * 1 centralized control terminal * 1
JP-24V-60W-05		DC24V 2.5A 60W			
JP-12V-100W-05	AC170-220V 50Hz	DC12V 8.3A 100W	200*56*20mm		Bipolar output dupont terminal * 9 bipolar centralized control terminal * 1 centralized control terminal * 1
JP-24V-100W-05		DC24V 4.1A 100W			
Controllable Remote Control: Wireless/wired remote control, 2.4 G intelligent remote control (classic) , etc.					

03 PENCIL TYPE WIRED SENSOR SWITCH SERIES

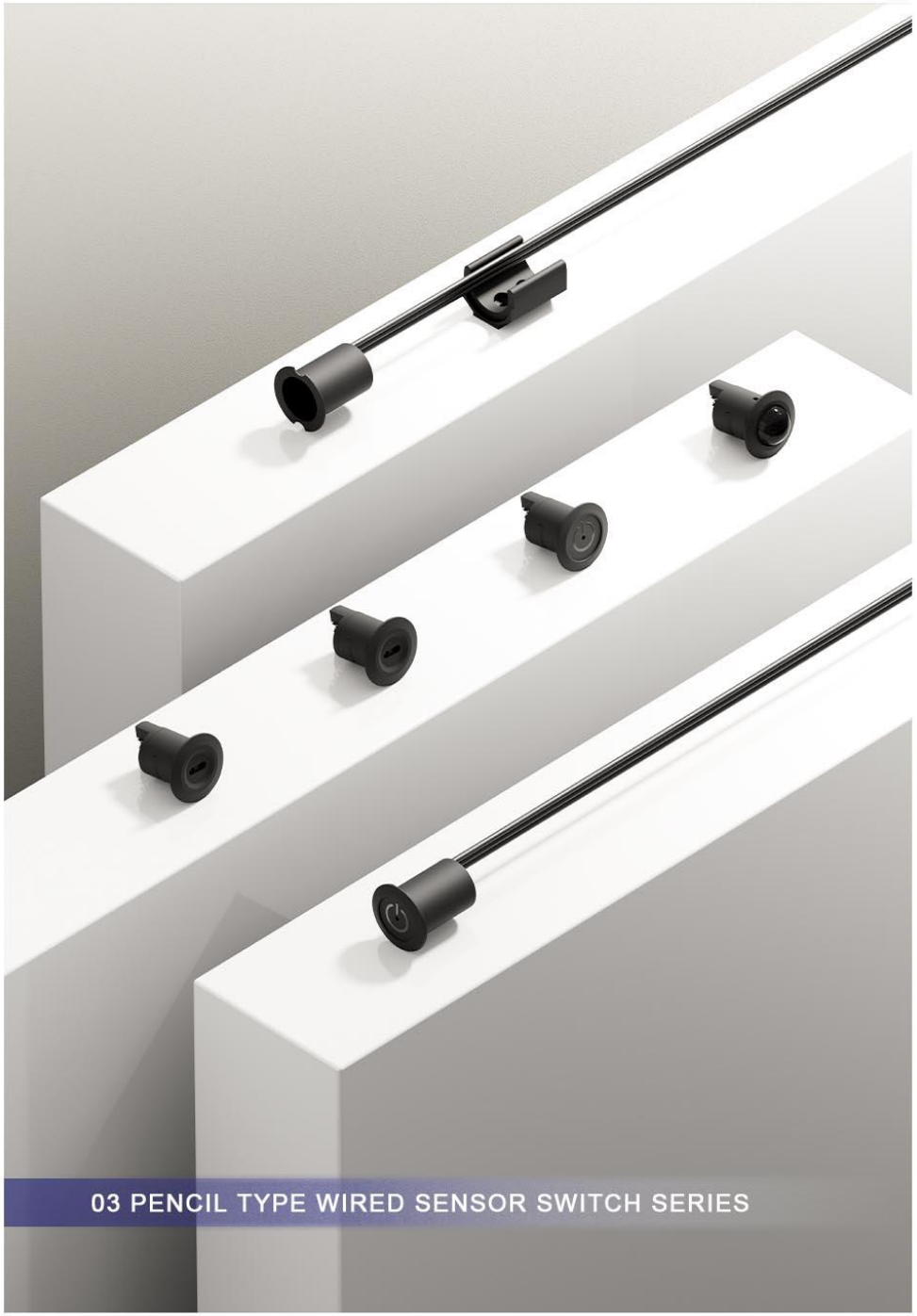

03 Pencil type wired sensor switch series

Product description:

- The penlight sensor utilizes a sleeve design with replaceable probes that This allows the sensing probe to be easily removed and replaced.
- The sleeve design ensures flexibility and maintainability in use, allowing users to quickly replace and maintainability in use, allowing any user to make quick replacements without having to replace the entire unit, resulting in significant cost and time savings.The sleeve design ensures flexibility and maintainability in use, allowing users to make quick replacements without having to replace the entire unit, saving costs and time.
- The pen sensor has been designed with ease of use in mind. It is easy to use for both installation and daily operation.The penlight sensor is designed to be easy to use, both in terms of installation and daily operation.
- This product is suitable for cabinets, bookcases, foyers, corridors,Wine cabinet, closet, bedroom lighting, etc.



03 Pencil Touch Sensor



03 Pencil Body Sensor



03 Pencil-type Hand Sweep Sensor



03 Pencil door sensor

03 Pencil type wired sensor switch series

Pseudolaric acid	03 Pencil type wired inductive switch	indicator light	Touch Sense: White Indicator
product category	Wired sensor for pen drive	Hole Size	φ12MM
wire	3P Terminal Connection Cable	containers	100 pieces/box
control method	Touch/Body/Hand Scan/Door Control	Terminal Polarity	- + S / + S - / - S +
Wire Length	2M	Wiring Method	centralized control
Packaging	boxed	Operating voltage	DC 12/24V
product category	Touch Sensor/Body Sensor/Hand Sweep Sensor/Gate Sensor		

Light intelligence-Bluetooth monochrome power supply

POWER SUPPLY



- SAFE, INTELLIGENT, STABLE AND CONVENIENT
- MULTI-OUTPUT, MULTI-TYPE SWITCH ACCESS
- MULTIPLE TYPES OF BLUETOOTH WIRELESS SWITCHES
- SUPPORT TMALL ELF AND WECHAT APPLET
- MEMORY FUNCTION, FADE IN AND OUT
- SUPPORT STEPLESS DIMMING, TURN OFF THE LIGHTS REGULARLY
- HIGH ENERGY AND LOW CONSUMPTION, OVERVOLTAGE, OVERCURRENT

NUMBER	POWER	OUTPUT	CURRENT	INPUT	PROTECT	FUNCTION	TEMPERATURE	PACKING	MATERIAL	PRODUCT SIZE
JP02D12036	36W	12V	0.26A	AC100-240V 50/60Hz	IP20	OVERPOWER PROTECTION OVERVOLTAGE PROTECTION OVERHEATING PROTECTION SHORT CIRCUIT PROTECTION OVERLOAD WARNING	-10~45℃	50个/箱	PVC	129*53*21 mm
JP02D24036		24V	0.26A							
JP02D12060	60W	12V	0.41A							157*53*21 mm
JP02D24060		24V	0.41A							
JP02D12100	100W	12V	0.76A							183*56*21 mm
JP02D24100		24V	0.76A							

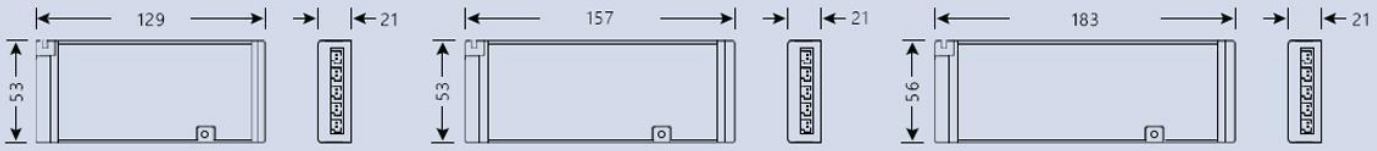

Light intelligence-small voice control box

INTELLIGENT VOICE



- BLUETOOTH CONNECTION, NO NETWORK, SIMPLE OPERATION
- VOICE CONTROL, QUICK RESPONSE, RICH WORDS
- COLLOQUIAL INSTRUCTION, PASSWORD CLEARING CODE
- SUPPORT SYNCHRONOUS ONE-TO-MANY POWER SUPPLY CONTRO
- CAN BE CONTROLLED IN GENERAL AND SEPARATELY,
- SUPPORT STEPLESS, GRADED TONE LIGHT AND RGB CONTROL
- 20M UNOBSTRUCTED CONTROL
- TURN OFF THE LIGHTS WITH SETTABLE DELAY.
- SUPPORT BRAND VOICE CUSTOMIZATION
- EXQUISITE APPEARANCE, ANGULAR DESIGN, SAFETY, INTELLIGENCE AND STABILITY

NUMBER	CATEGORY	WIRELESS TYPE	ON-OFF MODE	DISTANCE	CHARGING INPUT	PACKING	PRODUCT WEIGHT	PRODUCT SIZE
JPQZNYY001	SUPPLY ELECTRICITY	2.4GHz/Bluetooth	VOICE CONTROL	20M	TYPE-C 5V	20 PCS/BOX 80 PCS/BOX	59g	75*75*26 mm

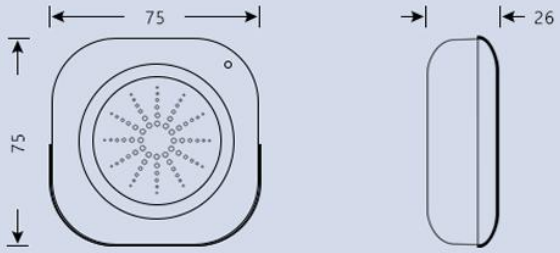

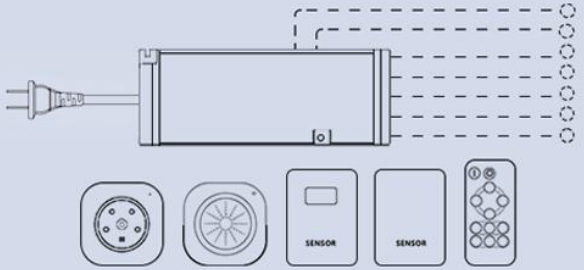

Light intelligence-six-key remote controller

REMOTE CONTROL



- CLEAR THE CODE QUICKLY AND SIMPLY, AND DO NOT STRING THE CODE.
- NO NEED FOR NETWORK, SIMPLE OPERATION
- MECHANICAL SHAFT, QUICK AND ACCURATE RESPONSE
- NON-DIRECTIONAL AND PENETRABLE PRECISE REMOTE CONTROL
- SYNCHRONOUS ONE-TO-MANY POWER SUPPLY CONTROL
- INFINITE, GRADED TONE LIGHT
- FAST MULTI-SCENE SWITCHING
- 20M UNOBSTRUCTED CONTROL
- TYPE-C CHARGING INTERFACE, BATTERY-FREE, LONG STANDBY.
- EXQUISITE APPEARANCE, ANGULAR DESIGN, SAFETY, INTELLIGENCE AND STABILITY.

NUMBER	CATEGORY	WIRELESS TYPE	ON-OFF MODE	DISTANCE	CHARGING INPUT	PACKING	PRODUCT WEIGHT	PRODUCT SIZE
JPQZNLJ001	CHARGING MONEY	2.4GHz/Bluetooth	KEY REMOTE CONTROL	20M	TYPE-C 5V	20 PCS/BOX 80 PCS/BOX	50g	75*75*20 mm

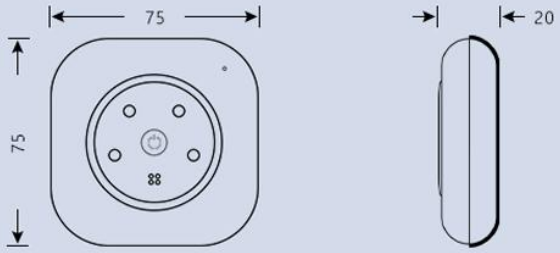

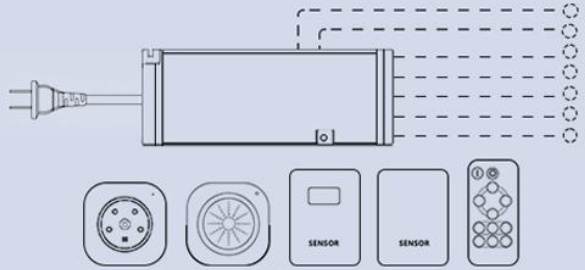

Light intelligence-human body sensor

SMART SENSOR



- MULTI-SENSOR MODE: HUMAN BODY, HUMAN BODY+BACKGROUND
- CLEAR THE CODE QUICKLY AND SIMPLY, AND DO NOT STRING THE CODE
- SYNCHRONOUS ONE-TO-MANY POWER SUPPLY CONTROL
- INFINITELY TONAL LIGHT, SETTING THE BACKGROUND BRIGHTNESS
- 3-5M HUMAN BODY INDUCTION, 20M UNOBSTRUCTED CONTROL
- KEY ANTI-FALSE TRIGGER LOCKING
- TYPE-C CHARGING INTERFACE, BATTERY-FREE, LONG STANDBY
- EXQUISITE APPEARANCE, ANGULAR DESIGN, SAFETY, INTELLIGENCE AND STABILITY
- BLUETOOTH CONNECTION, NO NEED FOR NETWORK, SENSITIVE AND EASY TO INSTALL

NUMBER	CATEGORY	WIRELESS TYPE	ON-OFF MODE	DISTANCE	CHARGING INPUT	PACKING	PRODUCT WEIGHT	PRODUCT SIZE
JPOZNRT001	CHARGING MONEY	2.4GHz/Bluetooth	HUMAN BODY INDUCTION	3-5M内	TYPE-C 5V	20 PCS/BOX 80 PCS/BOX	41g	85*60*16 mm

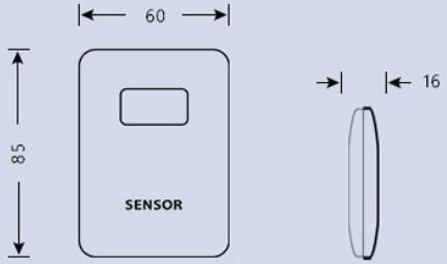

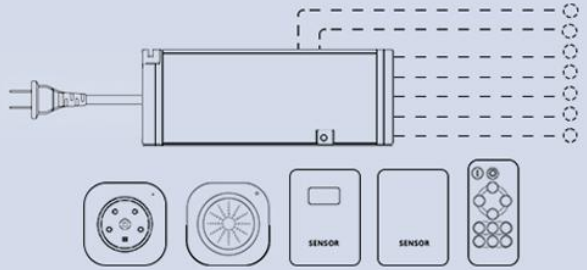

Light intelligence-hand-swept gating sensor

SMART SENSOR



- MULTI-SENSING MODE: HAND SCANNING, SINGLE/DOUBLE GATING
- CLEAR THE CODE QUICKLY AND SIMPLY, AND DO NOT STRING THE CODE
- SYNCHRONOUS ONE-TO-MANY POWER SUPPLY CONTROL
- INFINITELY TONAL LIGHT, SETTING THE BACKGROUND BRIGHTNESS
- 3-5CM INDUCTION, 20M UNOBSTRUCTED CONTROL
- KEY ANTI-FALSE TRIGGER LOCKING
- TYPE-C CHARGING INTERFACE, BATTERY-FREE, LONG STANDBY
- EXQUISITE APPEARANCE, ANGULAR DESIGN, SAFETY, INTELLIGENCE AND STABILITY
- BLUETOOTH CONNECTION, NO NEED FOR NETWORK, SENSITIVE AND EASY TO INSTALL

NUMBER	CATEGORY	WIRELESS TYPE	ON-OFF MODE	DISTANCE	CHARGING INPUT	PACKING	PRODUCT WEIGHT	PRODUCT SIZE
JPQZNMK001	CHARGING MONEY	2.4GHz/Bluetooth	HAND SCANNING GATING	5cm内	TYPE-C 5V	20 PCS/BOX 80 PCS/BOX	40g	85*60*12 mm

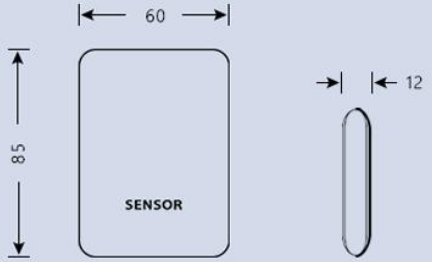

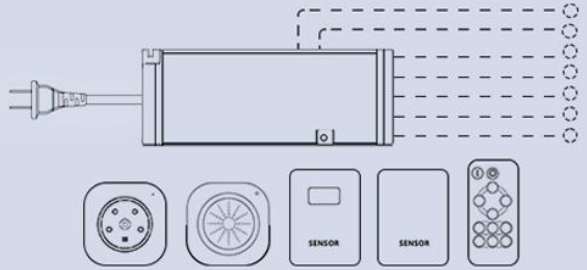

Light intelligence -RGBCW controller

COLOR CONTROLLER

- SAFE, INTELLIGENT, STABLE AND CONVENIENT
- SUPPORT MULTIPLE TYPES OF BLUETOOTH WIRELESS SWITCHES
- SUPPORT TMALL ELF AND WECHAT APPLET
- MEMORY FUNCTION, FADE IN AND OUT, SWITCH DIMMING
- SUPPORT DIY COLOR SETTING, MULTI-MODE DYNAMIC CHANGE
- SUPPORT STEPLESS COLOR MATCHING, STEPLESS DIMMING

  TURN OFF THE LIGHTS REGULARLY, AND SET BACKGROUND LIGHT



NUMBER	VOLTAGE	OUTPUT	OUTPUT CURRENT	TEMPERATURE	PROTECT	PACKING	MATERIAL	PRODUCT SIZE
JPRGBCW001	DC 12V DC 24V	12V/100W 24V/200W	8.3A	-20~55℃	IP20	100 PCS/BOX	PVC	85*60*12 mm

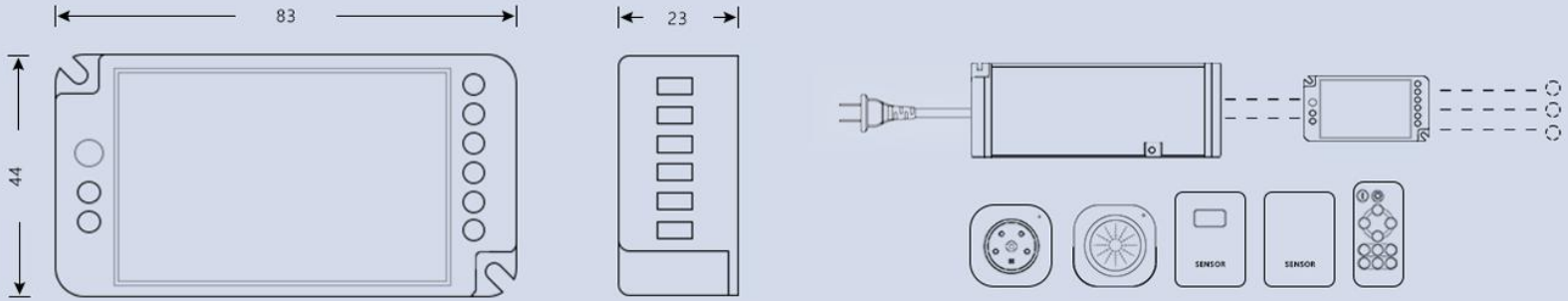

Light intelligence -CW controller

COLOR CONTROLLER

- SAFE, INTELLIGENT, STABLE AND CONVENIENT
- SUPPORT MULTIPLE TYPES OF BLUETOOTH WIRELESS SWITCHES
- SUPPORT TMALL ELF AND WECHAT APPLET
- MEMORY FUNCTION, FADE IN AND OUT, SWITCH DIMMING.
- SUPPORT STEPLESS COLOR MATCHING, STEPLESS DIMMING, TURN OFF THE LIGHTS REGULARLY, AND SET BACKGROUND LIGHT.



NUMBER	VOLTAGE	OUTPUT RATING	OUTPUT CURRENT	TEMPERATURE	PROTECT	PACKING	MATERIAL	PRODUCT SIZE
JPXXXCW001	DC1 2V DC 24V	12V/100W 24V/200W	8.3A	-20~55℃	IP20	100 PCS/BOX	PVC	85*60*12 mm

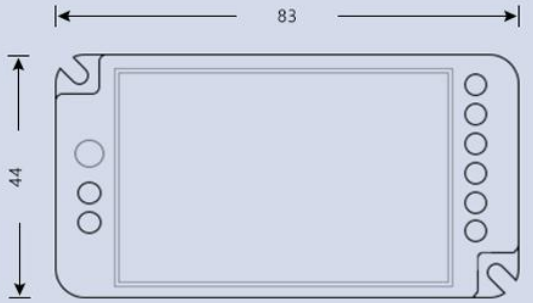



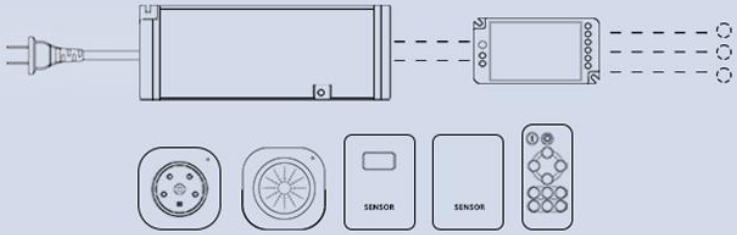



CABINET POWER SUPPLY

LED constant pressure ultra-thin cabinet lamp power supply, solid materials, durable, foot power, flame-retardant shell, security protection, can be applied to the majority of home cabinet lamp power needs.

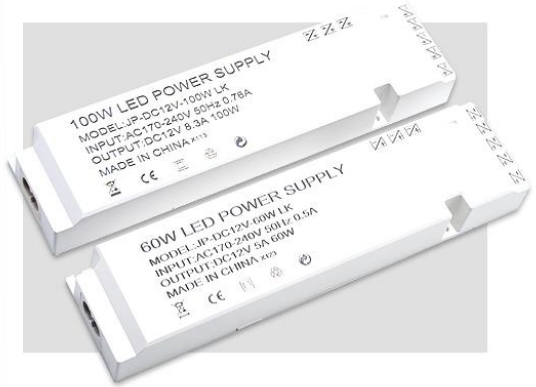

POWER SUPPLY-01

18W/24W
36W/60W/100W

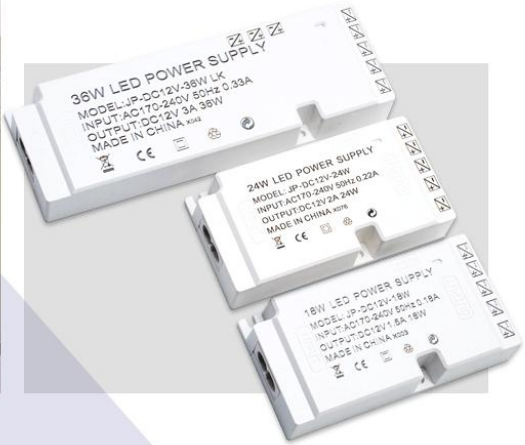



POWER SUPPLY-02

36W/60W/100W

02 power supply is more thin, the shell is still strong, flame retardant, 100W 02 has two 3p needle centralized control ports, can connect multiple controllers, the output port uses the dupont port, the input port AC terminal connection, has a variety of protection mechanisms, short-circuit protection, overload protection, over-current protection.

POWER SUPPLY-3C

26W/36W/60W

This one has cabinet lamp power 3C certification, strict control of product quality and safety issues, so that you have better feedback on the use of experience, customer trust is our best motivation.



LED POWER SUPPLY 01 SERIES

LED POWER SUPPLY 01 18W

INPUT VOLTAGE AC 170V-240V	RATED LOAD 18W	PRODUCT DIMENSIONS 100*52*20MM
OUTPUT VOLTAGE DC 12V	PRODUCT WEIGHT 86.5G	OPERATING TEMPERATURE -20-60℃



LED POWER SUPPLY 01 60W

INPUT VOLTAGE AC 170V-240V	RATED LOAD 60W	PRODUCT DIMENSIONS 208*52*24MM
OUTPUT VOLTAGE DC 12V	PRODUCT WEIGHT 201G	OPERATING TEMPERATURE -20-60℃



LED POWER SUPPLY 01 24W

INPUT VOLTAGE AC 170V-240V	RATED LOAD 24W	PRODUCT DIMENSIONS 100*52*20MM
OUTPUT VOLTAGE DC 12V	PRODUCT WEIGHT 86.5G	OPERATING TEMPERATURE -20-60℃



LED POWER SUPPLY 01 100W

INPUT VOLTAGE AC 170V-240V	RATED LOAD 100W	PRODUCT DIMENSIONS 208*52*24MM
OUTPUT VOLTAGE DC 12V	PRODUCT WEIGHT 201G	OPERATING TEMPERATURE -20-60℃



LED POWER SUPPLY 01 36W

INPUT VOLTAGE AC 170V-240V	RATED LOAD 36W	PRODUCT DIMENSIONS 157*52*20MM
OUTPUT VOLTAGE DC 12V	PRODUCT WEIGHT 172G	OPERATING TEMPERATURE -20-60℃





LED POWER SUPPLY 02 36W

INPUT VOLTAGE
AC 170V-240V

RATED LOAD
36W

PRODUCT DIMENSIONS
130*55*20MM

OUTPUT VOLTAGE
DC 12V

PRODUCT WEIGHT
172G

OPERATING TEMPERATURE
-20-60℃



LED POWER SUPPLY 02 60W

INPUT VOLTAGE
AC 170V-240V

RATED LOAD
60W

PRODUCT DIMENSIONS
160*55*20MM

OUTPUT VOLTAGE
DC 12V

PRODUCT WEIGHT
201G

OPERATING TEMPERATURE
-20-60℃



LED POWER SUPPLY 02 100W

INPUT VOLTAGE
AC 170V-240V

RATED LOAD
100W

PRODUCT DIMENSIONS
185*58*20MM

OUTPUT VOLTAGE
DC 12V

PRODUCT WEIGHT
201G

OPERATING TEMPERATURE
-20-60℃



LED POWER SUPPLY 3C 26W



INPUT VOLTAGE
AC 170V-240V

RATED LOAD
26W

PRODUCT DIMENSIONS
208*52*24MM

OUTPUT VOLTAGE
DC 12V

PRODUCT WEIGHT
129G

OPERATING TEMPERATURE
-20-60℃

LED POWER SUPPLY 3C 36W



INPUT VOLTAGE
AC 170V-240V

RATED LOAD
36W

PRODUCT DIMENSIONS
208*52*24MM

OUTPUT VOLTAGE
DC 12V

PRODUCT WEIGHT
185G

OPERATING TEMPERATURE
-20-60℃

LED POWER SUPPLY 3C 60W



INPUT VOLTAGE
AC 170V-240V

RATED LOAD
60W

PRODUCT DIMENSIONS
208*52*24MM

OUTPUT VOLTAGE
DC 12V

PRODUCT WEIGHT
222G

OPERATING TEMPERATURE
-20-60℃



INDUCTIVE SWITCH

Intelligent Induction Switch has human body induction switch, door induction switch, third-party voice service platform, etc. , applied to the interior of the wardrobe, to achieve intelligent control of lighting, convenient and efficient, fashionable and full of sense of technology, can bring fun and happiness to life.



MANUAL SCAN/GATE CONTROL

A SWEEP IS BRIGHT, IN THE SWEEP IS OUT

DOOR IS BRIGHT, CLOSED DOOR IS OUT



TOUCH SENSITIVE

ONE TOUCH IS BRIGHT, SHORT TOUCH SWITCH

LONG TOUCH CAN BE INFINITE DIMMING



HUMAN INDUCTION

PEOPLE COME TO LIGHT, INDUCTION 3-5M

PEOPLE GO AFTER 30 SECONDS GRADUALLY EXTINGUISHED

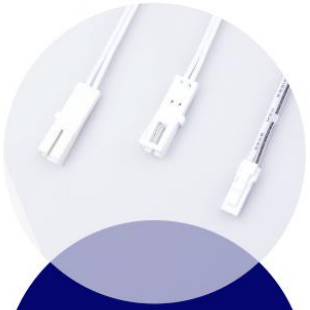

SUB-CONTROL:
THE USE OF DUPONT CABLE

MASTER CONTROL:
USING 3P NEEDLE CONNECTION LINE

IN THE HOME DECORATION, CABINET LIGHT IS A VERY IMPORTANT POINT IN THE HOME, THROUGH THE CONTROL OF MULTIPLE LIGHT SOURCES OF LIGHT, TO ENHANCE THE SENSE OF HIERARCHY AND ATMOSPHERE AT HOME, THE MORE COMMON HIDING LIGHT DESIGN IN THE DINING CABINET, WINE CABINET, WARDROBE, SHOE CABINET, BEDSIDE CABINET, TV HANGING CABINET, CAN PLAY A GOOD LIGHTING EFFECT.



SMALL VOLUME INDUCTION SWITCH SERIES

TOUCH-SENSITIVE SWITCH



SIZE (MM)	BASE	SHELL	VOLTAGE	POWER	DIMMER
13.5*16.5 Φ14	16MM	ABS	DC12-24V	SINGLE CONTROL ≤60W	YES

HAND-SWEEP GATE-CONTROLLED INDUCTION SWITCH



SIZE (MM)	BASE	SHELL	VOLTAGE	POWER	INDUCTION
17*12 Φ14	15.7*12.3	ABS	DC12-24V	SINGLE CONTROL ≤60W	< 10CM

HUMAN INDUCTION SWITCH



SIZE (MM)	BASE	SHELL	VOLTAGE	POWER	INDUCTION
17*16.5 Φ14	16MM	ABS	DC12-24V	SINGLE CONTROL ≤60W	3~5M

SWEEP THE DOOR CONTROL SENSOR SWITCH WITH BOTH HANDS



SIZE (MM)	BASE	SHELL	VOLTAGE	POWER	INDUCTION
17*12 Φ14	15.7*12.3	ABS	DC12-24V	SINGLE CONTROL ≤60W	< 10CM



"IT S ONLY A MATTER OF TIME BEFORE THE SMART HOME BECOMES THE MAIN BATTLEGROUND FOR SMART LIGHTING,"

As the direction of Jin Pei s efforts, the wireless electronic remote control sensor switch and household appliances are compatible with each other, turning the seemingly"Cold" intelligent technology into a product that people can control, which has laid the foundation for the expansion of intelligent control to the home field.

WIRELESS HUMAN SENSING:

People come to light, wide angle 120 ° sensing, people distance 3 ~ 5 m lamp automatically light up, stay in the active area will always light, after leaving the sensor 30 seconds out.

WIRELESS HAND SCAN, GATED SENSING:

HAND SWEEP SENSOR-HAND SWEEP SENSOR SENSOR 8 CM IN FRONT OF THE LAMP WILL LIGHT UP, AGAIN SWEEP THE LIGHTS OFF.

DOOR CONTROL SENSOR-PROBE INSTALLED ON THE DOOR EDGE, OPEN THE DOOR SENSOR AUTOMATICALLY TURN ON THE LIGHT, SHUT THE DOOR AUTOMATICALLY TURN OFF THE LIGHT.

WIRELESS TOUCH SENSING:

SHORT TOUCH SWITCH CENTER SENSING AREA, LIGHTS UP, IN SHORT TOUCH TURN OFF THE LIGHTS. LONG TOUCH SENSING AREA, YOU CAN ADJUST THE BRIGHTNESS OF LAMPS, A LONG TOUCH BRIGHT, AGAIN LONG TOUCH DIM.







WIRELESS INDUCTION

WITH THE IMPROVEMENT OF PEOPLE S LIVING STANDARDS, THE PURSUIT OF A GOOD QUALITY OF LIFE IS ALSO CONSTANTLY IMPROVING, MORE AND MORE PEOPLE HAVE REALIZED THE PRACTICABILITY OF AMBRY LAMP, WITH AMBRY LAMP SENSOR SWITCH, THERE ARE MORE PRACTICAL WIRELESS CONTROL TYPES, IN LIFE WILL BE MORE INTELLIGENT AND CONVENIENT, TO AVOID THE TROUBLE OF WIRING AT HOME, WITH MORE WORRY-FREE.

WIRELESS INDUCTION SWITCH SERIES

WIRELESS HUMAN INDUCTION SWITCH



> SIZE: 62 * 42 * 11.8 MM
> LOAD POWER: /
> ACCESS: CODE
> USB: RECHARGEABLE
> VOLTAGE: CHARGE 5V
> MATERIAL: ABS



WIRELESS TOUCH-SENSITIVE SWITCH



> SIZE: 62 * 42 * 11.8 MM
> LOAD POWER: /
> ACCESS: CODE
> USB: RECHARGEABLE
> VOLTAGE: CHARGE 5V
> MATERIAL: ABS

WIRELESS HAND SWEEP INDUCTION SWITCH



> SIZE: 62 * 42 * 11.8 MM
> LOAD POWER: /
> ACCESS: CODE
> USB: RECHARGEABLE
> VOLTAGE: CHARGE 5V
> MATERIAL: ABS

WIRELESS INDUCTION RECEIVER



> SIZE: 45 * 33 * 9 MM
> LOAD POWER:
TOTAL CONTROL 750W
SUB-CONTROL 60W
> ACCESS: CODE
> FUNCTION: CONTROL SWITCH/DIMMING
> VOLTAGE: DC12-24V
> MATERIAL: ABS





WARM YELLOW（3000K）



NEUTRAL LIGHT（4000K）

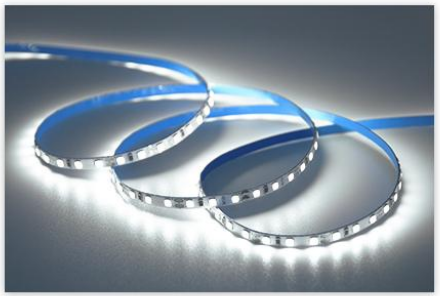

COLD WHITE（6500K）

LED SMD STRIP

LED LAMP IS WIDELY USED BECAUSE OF ITS ENERGY-SAVING AND ENVIRONMENTAL PROTECTION, IS A KIND OF HIGH UTILIZATION RATE OF LIGHTS, WITH THE ADVENT OF LED LIGHTS, LED LAMP BELT ALSO CAME INTO BEING, THE CONCEPT OF LIGHTING WITH THE ADVANTAGES OF LED LIGHTS IN CONTINUOUS DEVELOPMENT.

Using high-quality chip light source, double-sided soft circuit board, Lean Patch, life of 50000 hours. Can be customized according to customer requirements with a variety of plate width, length. 12V, 24V power supply, high safety and reliability.

LED MONOCHROME THERMOSTAT STRIP

MODEL: LJ33-120

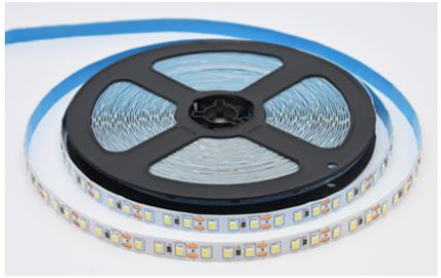

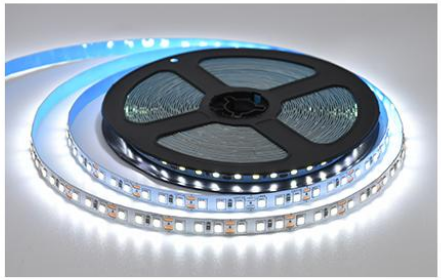

LJ33-120 PRODUCT INFORMATION	
INPUT VOLTAGE:	12V
PRODUCT POWER:	6W / 7W / 8W
LAMP BEAD MODEL:	2835 / 5050 / 3528
NUMBER OF LAMP BEADS:	60 /M, 120 /M
COLOR TEMPERATURE:	3000K / 4000K 6500K / 45000K
CUT THE WAY:	ONE GRAIN AT A TIME
WIDTH OF LAMP BOARD:	120D-5MM 120D-8MM 120D-10MM
SINGLE VOLUME:	5M/10M PER VOLUME
PACKING QUANTITY:	500M/CASE

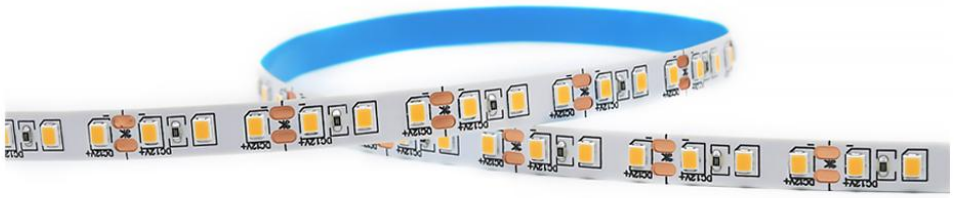

PRODUCT CHARACTERISTICS

HIGH CRI HIGH VISIBILITY

ADJUST THE BRIGHTNESS

INDUCTION SWITCH

CE CERTIFICATION

APPLICATION SCENARIOS









LED RGB LAMP TAPE

MODEL: LJ33-60





LJ33-60 PRODUCT INFORMATION	
INPUT VOLTAGE:	12V
PRODUCT POWER:	8W/10W
LAMP BEAD MODEL:	2835 / 5050
NUMBER OF LAMP BEADS:	60 /M
COLOR TEMPERATURE:	RGB
CUT THE WAY:	ONE SNIP FOR THREE GRAINS
WIDTH OF LAMP BOARD:	60D-8MM
SINGLE VOLUME:	5M PER VOLUME
PACKING QUANTITY:	500M/CASE



PRODUCT CHARACTERISTICS

RGB

MULTI COLOR

REMOTE CONTROL

CE CERTIFICATION

APPLICATION SCENARIOS



